Milenko JEVTIĆ*, Vladimir ZELJKOVIĆ*, Mirko ĐAPIĆ*

THERMAL INFLUENCES ON TURBOGENERATOR DYNAMIC BEHAVIOUR**

SUMMARY

Temperature fields in electric energy generation may lead to the mechanical disbalance of an already balanced rotor. The authors collected information in a number of Serbian steam power plants and they realized the existence of the problem. On the grounds of the relevant physical aspects they propose a mathematical model for identifying temperature fields in a turbo-generator rotor, and they suggest the optimum control by which the unwanted effects are eliminated.

***Keywords**: turbo-generator, thermal unbalance, temperature field, mathematical model, computer program*

WPŁYW TEMPERATURY NA DYNAMICZNE ZACHOWANIE TURBOGENERATORA

Pole temperaturowe w wytwarzaniu energii elektrycznej może prowadzić do nierównowagi mechanicznej wirnika będącego w stanie równowagi. Autorzy zebrali informacje w wielu elektrowniach cieplnych na terenie Serbii i stwierdzili istnienie tego problemu. Biorąc pod uwagę istotne czynniki fizyczne zaproponowano model matematyczny dla celów identyfikacji pól temperaturowych w wirniku turbogeneratora i na jego podstawie dobrano sposób sterowania optymalny ze względu na eliminacje niepożądanych zjawisk.

***Słowa kluczowe**: turbogenerator, nierównowaga termiczna, pole temperaturowe, model matematyczny, program komputerowy*

1. INTRODUCTION

Electric energy is produced in steam power plants under complex conditions. Energy transformation processes in turbo-generators are particularly complex. Electrical, electromagnetic, thermodynamic and fluidic parameters are implemented into the rotating machines dynamics. The simultaneous rotor heating and cooling during the transitional thermal process and in the stationary regime are particularly important. Any disturbance in this system can cause very serious damages. The consequences regarding personnel, equipment and environment can be fatal, so this research has been conducted with due respect.

2. TECHNICAL DESCRIPTION

Turbo-generator is a very complex electric machine, Various materials having different characteristics are built into its complex rotor and stator structures. Figure 1 shows the machine schematic solution.

It is worth noticing that rotor grooves are filled with hollow conductors for conducting both electric current and cooling fluid [2]. Each conductor is a heat source; the heat is driven away by the cooling fluid. The second stream of the cooling fluid flows through a gap between the rotor and the stator. Figure 2 represents the complex fluid flow: the stator has a stand-still boundary layer, while the rotor's layer rotates with velocity equal to the rotor's circumferential velocity. The flow in the center of the gap has both axial and radial velocity components.

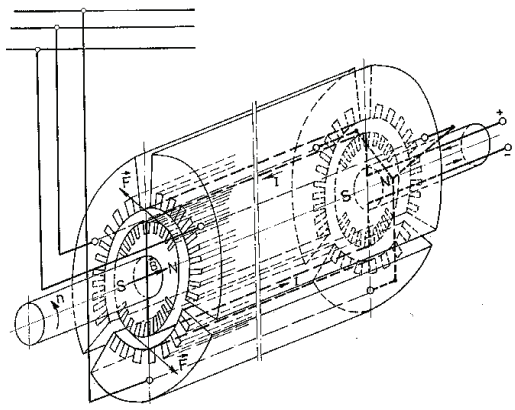

Fig. 1. Turbo-generator view

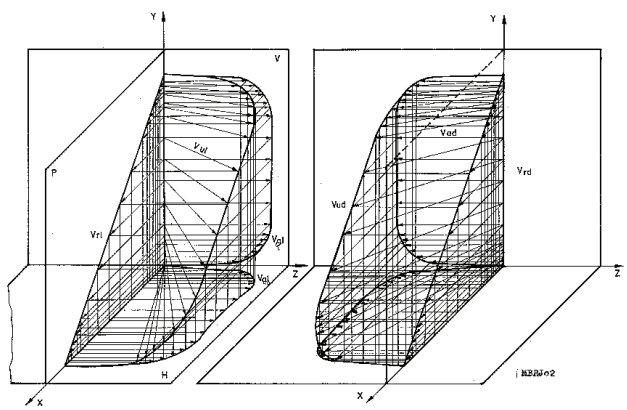

Fig. 2. Gap cooling fluid stream velocities

* LOLA Institute, Special Technologies Department, Belgrade, Kneza Višeslava 70/a, Serbia

** Artykuł uzyskał pozytywne recenzje i był prezentowany podczas Międzynarodowego Sympozjum Maszyn Elektrycznych SME 2006 w Krakowie

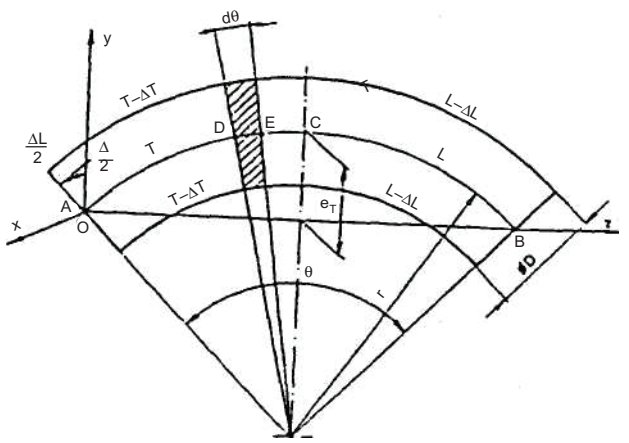

Fig. 3. View of the deflected rotor

The third fluid stream cools the front packages of stator sheets. Disturbances caused by simultaneous rotor heating and cooling create an asymmetric temperature field along rotor circumference which changes both in time and space and thus causes thermoelastic deflections with a significant increase of inertia forces, kinetic pressures and bearings vibrations. Thus provoked vibrations cannot be eliminated by dynamic balancing. The schematic presentation of the deformed rotor is given in Figure 3. Rotor material elongation occurs on the side of increased temperature, while size reduction occurs on the other side, provoking thermoelastic rotor deflection of angle θ, due to temperature asymmetry ΔT. Definition of the origin of rotor deflection e_T and its consequences are the central topic of the conducted research [4].

3. MATHEMATICAL MODEL AND CALCULATION

After a detailed analysis of relevant electrical, electromagnetic, thermodynamic, fluidic and dynamic parameters and the derivation of complex analytical elaboration we obtained an original mathematical model of temperature distribution along the rotor circumference and within its structure, in the form of the following complex differenttial equation

$$\frac{1}{r}\frac{\partial}{\partial r}\left(\lambda\frac{\partial T}{\partial r}\right)+\frac{\lambda}{r^2}\frac{\partial^2 T}{\partial\varphi^2}+\frac{\partial T}{\partial\varphi}\omega\lambda+\lambda\frac{\partial^2 T}{\partial z^2}= =\rho c\frac{\partial T}{\partial t}+q(r,\varphi,y,t) \tag{1}$$

where:

- T – temperature,
- t – time,
- r, φ, z – cylindrical coordinate,
- λ – coefficient of temperature transfer,
- ω – angular velocity,
- ρ – density,
- c – specific temperature.

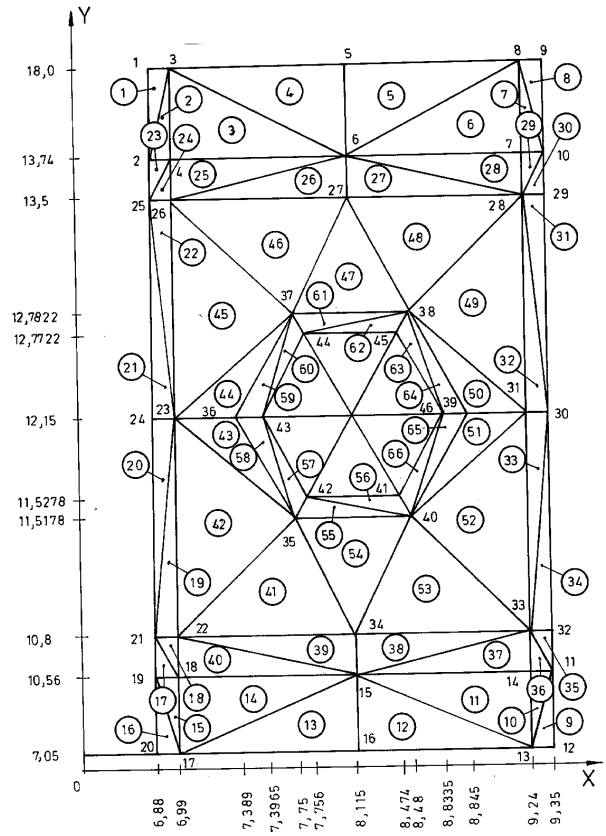

Fig. 4. Rotor structure discretization

Having set relevant boundary conditions and having defined the necessary functional form, we solved the obtained differential equations by using a powerful computer system. In order to complete the calculations, it was necessary to divide the rotor structure, together with conductors, insulation and rotor core, into finite elements with simulated impurity deposits in conductor canals. This discretization is given in Figure 4. Finite elements have a triangular form, which means that they become three-sided prisms after the introduction of z-axis. From thus conducted rotor structure discretization and the previously set differential equations an original computer program for solving the differential equations and obtaining the temperature distribution in finite elements and knots under different turbo-generator rotor operating regimes was developed. One segment of the developed computer program block diagram is given in Figure 5. The performed calculation refers to the simulation of the simultaneous rotor structure heating [8] and cooling, for different values of the impurities deposit thickness asymmetrically distributed along the canals for rotor conductors cooling. Such disturbances are particularly important for investigating the generated thermoelastic deflections and dynamic forces.

The differential equation used for this research includes electromagnetic, electrical, thermal, fluidic and dynamic parameters in the time interval between starting the turbo generator and reaching the stationary thermal state under the conditions of simultaneous system heating and cooling. The calculation was conducted using 1200 time increments, each increment being 22.5 s, which makes a total of 7.5 hours of transition process operation.

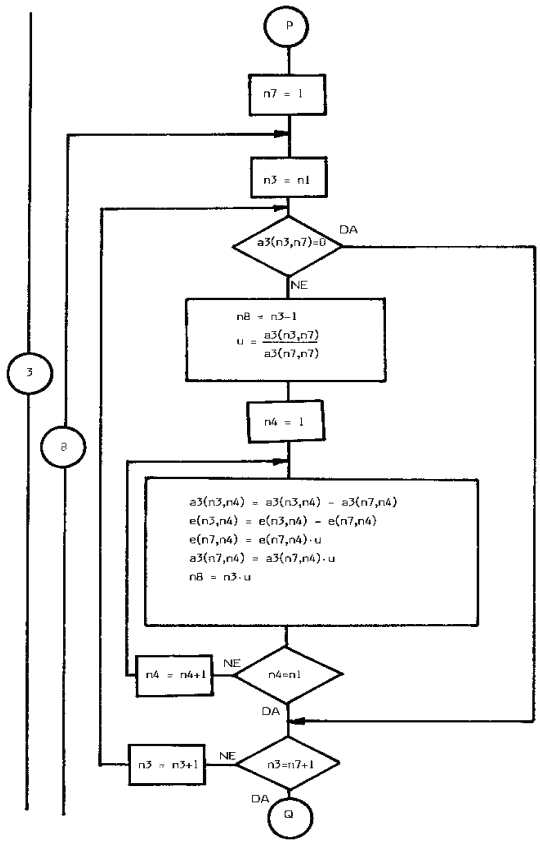

Fig. 5. Program block diagram segment

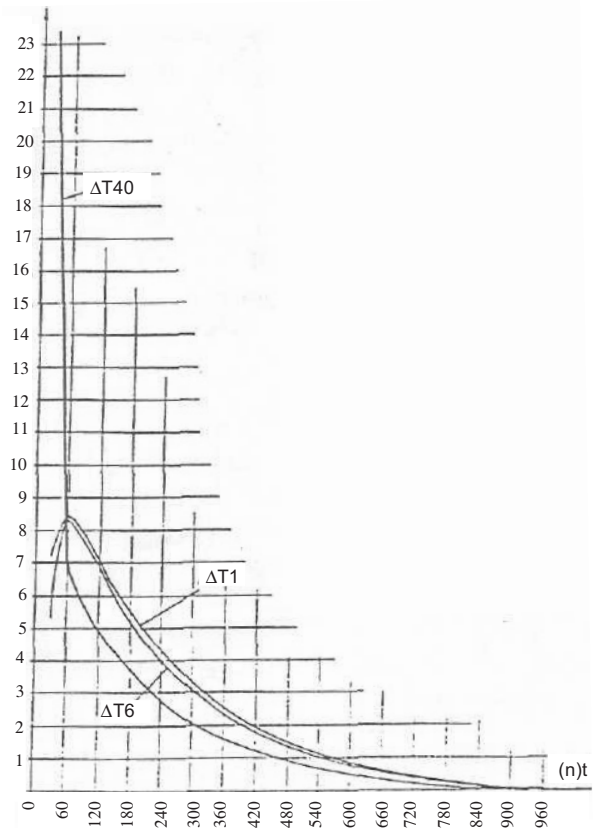

Fig. 6. Temperature increments in time

4. RESEARCH RESULTS

The conducted research [10] was complicated to a great extent by the fact that die temperature increase changes the electric resistance of the copper conductor, as well as the generated quantity of heat. Starting with room temperature for $t = 0$ and taking the temperature value at each interval's end as the initial value for the following interval, we obtained the time dependence of the heat quantity changes in all finite elements. This heat is generated in the conductor due to changes in its specific electric resistance and it is driven away by conduction and convection during simultaneous heating and cooling.

By solving the set complex form differential equations in the described manner, we obtained die mean temperature values for all time instants t and all rotor structure knot points. From the analysis of these values we got the picture of temperature increments along the finite elements and knot points in time t and for each time increment. Figure 6 shows temperature increments for knot points 1, 6 and 40, for $n = 960$ increments.

The basic result of this research is the obtained time dependence of temperature changes in the rotor structure knot points and finite elements under simultaneous heating and cooling, for different conductor cooling canals impurity deposits thickness values (0.01; 0.1; 0.2; 0.3; 0.4; 0.5 mm), since these temperature changes represent basic thermal disturbances. In this manner we obtained the mentioned dependencies in table, analytical and diagram forms for all rotor structure finite elements and knot points.

The results obtained during this research were analyzed in a systematic way and used for defining the original version of the dynamic stability chart for the 350 MW turbo-generator with clearly defined operating regions and dynamic stability boundaries, depending on the extent of thermal disturbances while cooling by conduction and convection. Criteria [5] for estimating the 350 MW turbo-generator dynamic stability together with boundary values of thermal disturbances while driving the heat away from conductor canals, shown in Figure 7 represent the original results of the authors' research.

The mentioned chart of dynamic stability under the conditions of different thermal disturbances shows obvious regions of undisturbed, permitted, boundary and forbidden operation with defined boundary values of vibration amplitudes and scopes of thermal disturbances.

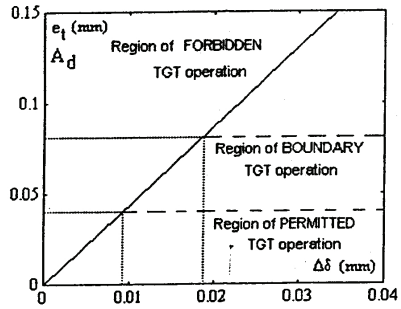

Fig. 7. Chart of the 350 MH' turbo-generator stability under the rotor thermal disturbances conditions

5. SYSTEM FOR AUTOMATIC TURBO-GENERATOR THERMAL BALANCING

Since high power turbo-generators are extremely expensive and technically complex electric machines which confine to strict requirements for high quality materials and high precision manufacturing with narrow tolerances and since the problem of thermal unbalancing cannot be avoided, the authors of this research developed a concept of automatic turbo-generator thermal balancing system. One version of the solution for modifying and modernizing the existing turbo-generator concepts is given in Figure 8.

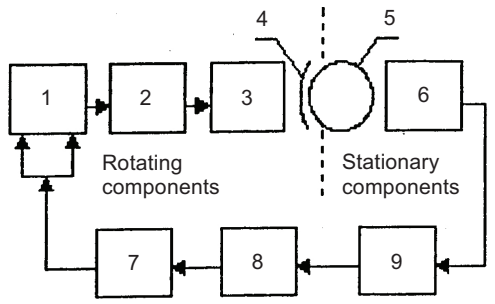

1. turbo-generator rotor
2. sensor
3. converter with amplifier
4. rotating signal transmitter
5. stationary antenna
6. signal receiver
7. transmission mechanism
8. servo control device
9. process computer

Fig. 8. System for automatic turbo-generator thermal balancing

The original solution developed by the authors assumes automatic corrections in rotor cooling in order to provide the most intensive codling in the zones which generate most heat, by automatic redistribution of heat which is being driven away and by averaging out the temperature field along the rotor circumference.

It is also assumed that temperature sensors are positioned along the rotor circumference. They transmit signals (in a contactless manner) about temperature values, which are then received by stationary antennas, amplified and fed into a process computer which drives the servo and transmission mechanisms for correcting the cooling fluid flow so that warmer rotor structure zones are more intensely cooled with automatic temperature averaging along the rotor circumference. The possibility of the occurrence of vibrations of technical origin is eliminated by obtaining a symmetric temperature field.

6. CONCLUSION

The idea of vibrations of thermal origin became interesting only recently and appeared in modem literature with the appearance of high power turbo-generators. Since high power turbo-generators are very expensive and complex electric machines, research in this area is highly justified not only today, but in the future as well. The authors conducted this significant and very complex research and gave their original contribution by clarifying the causes and consequences of thermal disbalance of the rotor. All relevant parameters and data which correspond to the real 350 MW turbo-generator were used in the course of investigation. A complex mathematical elaboration included the influence of electrical, electromagnetic, thermal, fluidic and dynamic parameters. Hence, this investigation represents an implementation of these disciplines into the rotating machines dynamics. An original differential equation form was derived, including all mentioned parameters, for obtaining a relevant functional form. The differential equation was solved using the finite elements method. An original computer program was developed for this purpose. The influence of thermal disturbances on the turbo-genera for dynamic behavior was investigated in detail and the chart of thermo-dynamic stability of operation with boundary regions was established. The authors proposed the concept of automatic thermal turbo-generator rotor balancing system. The research is of the original character and its results are the authors' intellectual property.

The paper is part of the project TR-6320 B MNZZS, Republic of Serbia

References

[1] Zienkiewicz O.C.: *Finite Elements Method.* J. Wiley, New York 1968
[2] Jevtić M.B., Gligorić B., Vukelja D., Đorđević: *Thermal Influence of Dynamic Behavior of Turbo-generator Rotor.* Eighth World Congress on the Theory of Machines and Mechanisms – IFToMM, Prague 1991, 743–747
[3] Vukelja D., Jevtić M.B., Gligorić B., Šolaja V.A.: *Contribution to the Study of Thermobalancing of Rotors in Plants*. International Symposium on Design and Synthesis, July 11–13, Tokyo 1984, 553–556
[4] Jevtić M.B.: *Research on the impact of the rotor structure temperatures on the dynamic behavior of large turbo generators, Nikola Tesla III Millennium, V International Conference.* Serbian Academy of Sciences and arts Belgrade, Tesla International Inc. Colorado Springs, USA, Proceedings, Belgrade, 1996, p. I–107 to 115
[5] Jevtić M.B.: *Generation and prevention of vibrations of thermal origin on the Rotors of high Power Synchronous generators in Steam Power Plants, Research results, Mechanics, Materials and Constructions.* Serbian Academy of Sciences and Arts, Scientific Meetings, Volume LXXXIII, Department of Technical Sciences, Book R, Belgrade, 1996, p. 595
[6] Jevtić M.B.: *Research, development and application of Theory of Vibration due to thermal causes for turbo generator, XXXV International Symposium of Electrical Machines, SME 99.* Electrical Machines in Electrical Power Industry, Warsaw University of Technology – Institute of Electrical Machines, Polish Academy of Sciences, Kuzimierz Dolny, Poland, Proceedings, 1999, p. 18 to 27
[7] Jevtić M.B.: *Presentation of Jevtić's Theory for Thermally induced oscillations and the Application to Turbo generators, XXXVI International Symposium of Electrical Machines-SME 2000.* Investigations diagnostics, modeling of Electrical Machines, Wroclaw University of Technology, Szklarska Poreba, Poland, Proceedings, 2000, p. 139
[8] Jevtić M.B.: *New Jevtić's Theory of vibration due to Thermal causes, XVI International conference on Material flow, machines and devices in industry-ICMFMDI 2000.* Faculty of mechanical Engineering Belgrade, Proceedings, 2000, p. 5.1
[9] Jevtić M.B.: *Investigation, Development and Application of new Theory of vibration caused by Temperature for Turbo generator, XL International Symposium of Electrical Machines-SME 2004.* Warszawa, University, Electro technical faculty, Hajnovka, Poland, Proceedings, 2004, p. 123
[10] Jevtić M.B.: *Research and Development of New Theory of Vibration.* International Journal, Engineering and Automation Problems, Moscow, 2004, vol. 3. p. 44

Wpłynęło: 26.09.2006

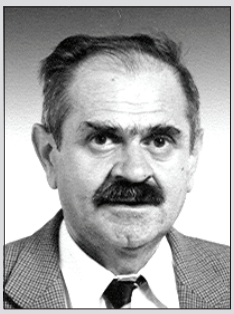

Milenko B. JEVTIĆ

Ph.D. Milenko B. Jevtić, dipl. Mech. Eng. was born in Pločice 1947 in Serbia. He graduated at the Mechanical Engineering Faculty in Belgrade in 1971, magistrated in 1976 and he completed his doctoral dissertation in 1993. He realized about 250 scientific-research projects and most of them are practiced in industry. He published about 190 papers in proceedings, elaborates, studies and technical researchments, and 148 studies were publicly presented on many Serbian and international congresses, symposiums and scientific conferences. He developed and practiced about 20 original technologies in industry, methods of production, new products and new theories. One of notable theories is the theory of thermical balance of rotor with complex configuration. This theory was called the theory of vibration with thermical origin, which is interesting on roto machines with asymmetrical arrangements of thermical fields. Because the fields are asymmetrical, this causes development of real thermoelastical deformations of rotor, big inertial forces and uncommitted level of vibration in machine bearings. Ph.D. Milenko B. Jevtić worked in the Institute for Machine Tools and Tooling since 1970, and now he works in the LOLA Institute as Principal for scientific programs. He is president of the Association of University Professors and Scientists of Serbia since 2004.

e-mail: jeff@lola-ins.co.yu

Vladimir ZELJKOVIĆ

Vladimir Zeljković was born in 1946 July 24 in Trubar – Drvar, BiH, Former Yugoslavia. He received his B.Sc., in The University of Belgrade, The Aerospace Department at Faculty of Mechanical Engineering in 1970; M.Sc. degree, in The Reliability Engineering in the Aerospace and Mechanical Engineering Department, The University of Arizona, USA in 1975; and Ph.D., in The University of Belgrade, The Aerospace and Mechanical Engineering Department, Belgrade in 1981. He has experience in the fields Aeronautics, Reliability, and Automatic Control. He published three books in reliability and one book in automatic control system. He presented/published more than 100 papers in domestic and international conferences and journals. He is currently working at Institut of Technical Sciences of the Serbian Academy of Sciences and Arts.

e-mail: vladazz@yahoo.com

Mirko ĐAPIĆ

Was born in 1956 on August 11 in Bitelic, Sinj Republic of Croation. He received B.Sc. on University of Belgrade, Mechanical Engineering Faculty in 1980. M.Sc. degree received on the same faculty 1993. in the field of manufacturing engineering and Ph.D. on same faculty 2000 in the field of manufacturing and quality engineering. He is experience in the field of design theory, quality and manufacturing engineering. He is a senior member of ASQ (American Society for Quality), member of IQA (Institute of Quality Assurance, London UK), and IRCA (International Register of Certification Auditor, UK), in grade: QMS-2000 Auditor. He published a book about using theory belief function in the field of conceptual design. Also he presented/published more then 100 papers on domestic and international conference and journals. He is currently working at LOLA Institute Belgrade and Mechanical Engineering Faculty of Kraljevo.

e-mail: mdjapic@yahoo.com