Bartłomiej GAWEŁ*, Anna PILCH*

USAGE OF BUSINESS RULES IN SUPPLY CHAIN MANAGEMENT

Abstract: The growth of efficiency in supply chain management depends on the level of IT support in enterprise and its flexibility to adapt to changes. Business rules management systems enable dynamic adjustment to unstable environmental conditions, whereas business process management systems give support for serializing processes. The paper provides overview of new rule-based process modeling language which integrates both approaches.

Keywords: BPMN, business rules, R2ML, XPDL.

1. Introduction

If enterprise wants to effectively respond to changes in supply chain it needs IT support on operational level. Therefore, it requires a system that could supports management, automates routine procedure and also has measuring and improving efficiency mechanisms as well as tools that allows member of organization for self-improvement.

Two sets of such solutions could be distinguished on the market. They are: workflow management system and business rules management systems. Although both have an objective to improve the efficiency of evoking predefined processes they perform this task in a radically different way. Workflow system enforce specified sequence of actions and ensure the way o its implementation. If organization has worked out a stable and precise definition of fundamental rules the system of this class if the right solution (provided variability of these rules in time is negligible).

Business rules management systems using values of states of objects, which represent entities inside and outside the company, support operational decisions and process of monitoring enterprise effectiveness from performance viewpoint. For this purpose they use knowledge that is defined by business rules contained in the proper databases. Thus, they are an effective solution for organizations operating in the rapidly changing world.

* AGH University of Science and Technology, Krakow, Poland

In fact, most of the processes which occur in the company requires combination of procedural and rule approach. The purpose of this paper is to present results of the survey of universal metalanguage which allow to model processes of variable flexibility in time, therefore it is required to join procedural and join approach. A process defined in this metalanguage could be transformed by business rules management system.

2. State of art

One of the goals of contemporary management system in the enterprise is to provide the experts simple language to communicate with IT management systems. Thus, the user is able to define their own objects and functions imitating behavior of entities in the enterprise by using the implications that are written in natural language. Introduction of new rules into the system does not require the participation of a software engineer, nor knowledge of specific information language, so that it may take place almost in real time.

Accomplishment of the implementation of communication between experts and the system varies depending on the type of the system. In workflow management system we are dealing with visual languages, while in business rules management systems with attempts to create language which close to natural. Although before these solutions will be closer presented, firstly should be defined what the authors of this paper meant by the term "business rule".

Business rules present a heterogeneous set which is coupled with one common feature which is the similarity of construction. Each business rule consists of two parts. The first describes conditions, which have to be fulfilled to evoke the rule, whereas the second describes changes in states of attributes of the conceptual classes which are respond to this change. Example of business rule: "If the order is small and the delivery time is longer than a week, then assign low degree of order importance." Thus, the business rule is a conditional sentence like: *if* some conditions occur, *than* perform some actions.

Business rules are assumed to be divided into five groups (Wagner 2005), depending on their construction and the scope of application. From the perspective of logistics processes management essential are action rules – ECA (Event-Condition-Action). The principle of its working is similar to the third principle of dynamics ("action equals reaction"). These rules represent the respond of the system to occurring some action in enterprise. So that they allow to automate action of the system, for example, in case of emergency. From logistics points of view reaction rules allow to automate company resource management. For example, in Ram (2005) is showed how to prevent losses in case of sudden changes in the orders, which are often a major problem in supply chain management.

In recent years solution based on business rules repositories are frequently implemented. Both (Trebilcock 2009) SAP and Oracle, who are leaders in this area, have modules for business rules management. In practice flexibility (Ram 2005) of the description of the process, that provide reaction rules, faces two major constraints.

There are many standards describing business rules like: RuleML, SQL and OCL that enable easy processing by commercial as well as open source business rules engine. The main disadvantage of all these metalanguages is the fact that their construction is mainly subordinated to the simplicity of processing by business rules engine and thus it is difficult to assimilate by human.

Although there are solutions based on natural language (for example SBVR that allows to define rules in the so-called simplified English) or metalanguage UML, but mapping more complex process using such language is difficult and time consuming. The simplicity of notation of rules (conditional sentence) makes that even the simplest description of the process requires the creation of long lists of rules.

It is not surprising considering the nature of the logistic models, where the important role is played by sequential constraints between tasks, that more and more popular are visual languages such as BPMN, which derive from a process approach. BPMN provides i.a. graphical presentation of sequence of activities in supply chains and distribution. The development of this notation caused that it became an universal tool to transfer processes created by BPMN between different logistics systems as well as for exchange information between companies in the supply chain.

Additional benefit associated with the use of BPMN diagrams is the possibility of their transformation to BPEL or XPDL. Notation in XPDL (Filograna 2007) allows to transfer diagrams between different tools as well as to map the process in a manner that allows workflow to be automated by the system. The main disadvantage of BPMN is the lack of support for changes in limited conditions of the process during its life time. In other words, the process described by BPMN is inflexible and unable to self-adjust to change.

Currently, an Eclipse-based application (Milanović 2008) is being developed, it is intended to allow the introduction of special kind of gateways to BPMN diagrams. These gateways would include business rules that would be automatically saved to R2ML. In that way the processes written in BPMN can be changed dynamically during lifetime of the process. Therefore it extends the notation of the additional gateways to define rules. Application allows to create reaction rules. However the objective of the project is to create opportunities for defining all five types of business rules.

This language, however, does not provide any tools to make dynamic changes in the system which are available using business rules. Therefore, support for the modeling of logistic processes is to create a language that would enable the use of BPMN visual diagrams to record business rules with their assistance. Thereby allowing their use in business rules engines that are used in logistics management systems. Below are the theoretical assumptions for the construction of such language.

3. Process rules language assumption

Variability and complexity of the organizations is the cause of using a wide range of models, claims, organization theory, management concepts, and pattern of behavior for its application. Using them to solve a specific problem requires setting

assumptions in the real world of organization, which is possible through the formalization of knowledge about the company that means the categorization and creation a hierarchy of the objects contained in its interior. This approach to modeling corresponds to the generally accepted definition of the term ontology.

Modeling language presented in this article is ontology in terms of information, and therefore falls into the category of designated models (explanatory), whose purpose is to clarify the essence of the features of the system. Modern research on the ontological modeling process focused on creating universal modeling notation, which differ among themselves by: semantics and syntax. Selection of grammar and vocabulary is determined by the scope of the ontology and its recipient.

Visual language presented in this work is subordinated to the MDA (Model Driven Architecture) architecture. It allows to look at the modeling process from three perspectives: a man who wants to understand the problem, which needs to be presentated in visual or close to natural language; mediation between the systems, which requires the creation of notation in the dialect understood by many information systems; and information system, which requires a model of the process written in language facilitating workflow automation. The purpose of the model of process, presented in this article, is to allow to store the information about state of the process in a manner accessible to the human and to provide dialect for exchanging information about the process which would be understandable by many information systems. Figure 1 shows metalanguage schema. Metalanguage should enable the mapping of the process in language close to BPMN.

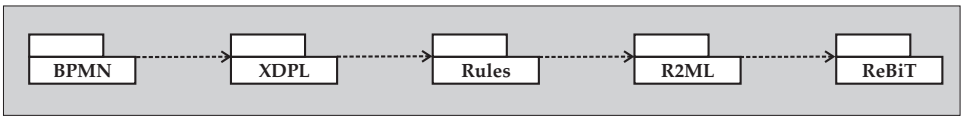

Fig. 1. *Package diagram for process – rule language*

This language should then be transformed into XPDL that allows to exchange information between the systems. In the next step the automatic translation of XPDL to rules form and then to R2ML will be made. The process written using R2ML will be in fact, the rules database, which can then be directly imported to business rules engine identified as ReBiT.

Though XPDL and R2ML are languages based on XML, their structure is so different that it is not possible to conduct direct translation of the information contained in this languages. Therefore it was decided to begin construction of the language from the analysis of typical control structures occurring in the processes. Then determine how they are represented as in the process (XPDL) as in rule (BPMN) languages and on this basis build rules for translating.

The concept of process is a complex term and is exposed in different ways at different levels of management. From the standpoint of the model at the operational level is vital to describe the structure of the process. The structure is responsible for the description of the workflow. In BPMN for description the structure of the process

responds a group of conceptual classes: Flow Objects (Events, Activities, Gateways), Connecting Objects (edges define the limits for the flow of information and materials), Swimlanes (roles of resources) and Artifacts (i.e. the data required or produced by the process). This article focuses only on the elements belonging to the first group.

The definition of the structure of the process in BPMN notation, also called the reference model, begins and ends with an event corresponding to the beginning and the ending of the process (Fig. 2). These are abstract entities that forces the process to have one beginning and one end. Between them are located tasks (rules) which correspond to the possible implementation of the operations (state changes) during the process.

Flow control rest on the transfer of labor between these tasks. Flow control is based on the objects belonging to the category Connecting Objects, that is transition. They define a set of possible premises and consequents of the task. Transitions are subordinated to additional constraints of the control. In a sequence, tasks are executed one after the other. Often the flow is associated with the decision – for control in this area are responsible the objects belonging to the category Gateways. BPMN notation enables modeling of three types of gates: XOR, OR and AND.

Mapping the structures described above to XPDL takes place in a semi-automatic way. Figure 2 shows how notation of the parallel split can be translated into XPDL.

BPMN

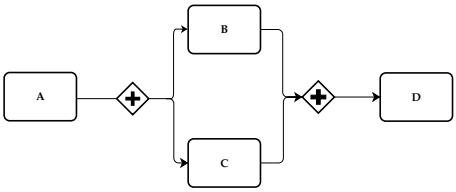

XPDL

```
1  <Workflowprocess id="Parallel">
2   <ProcessHeader DurationUnit="Y" />
3       <Activity Id="A" />
4       <Activity Id="B" />
5       <Activity Id="C" />
6       <Activity Id="D" />
7    <TransitionRestrictions>
8      <TransitionRestriction>
9          <Split Type="AND">
10           <TransitionRefs>
11             <TransitionRef Id="AB"/>
12             <TransitionRef Id="AC"/>
13          </TransitionRefs>
14         </Split>
15     </TransitionRestriction>
16    <TransitionRestriction>
17         <Join Type="AND"/>
18           <TransitionRefs>
19             <TransitionRef Id="BD"/>
20             <TransitionRef Id="CD"/>
21          </TransitionRefs>
22    </TransitionRestriction>
23   </TransitionRestrictions>
24   <Transitions>
25     <Transition Id="AB" From="A" To="B"/>
26     <Transition Id="AC" From="A" To="C"/>
27     <Transition Id="BD" From="B" To="D"/>
28     <Transition Id="CD" From="C" To="D"/>
29   </Transitions>
30 </WorkflowProcess>
```

Fig. 2. *Conversion parallel split/ synchronization to XPDL*

Similar rules do not exist for business rules. Therefore, in the next step, these rules have been created. In this case ECAA rules have been used. Example of these rule is shown in Figure 3.

ON	*Event*
IF	*Condition*
Then DO	*Action*
Else DO	*Alternative Action*

R2ML

```
<r2ml:DerivationRuleSet>
   <r2ml:DerivationRule r2ml:id="DR001">
      <r2ml:conditions>
         <r2ml:GenericAtom r2ml:predicate="parent">
            <r2ml:arguments>
               <r2ml:Variable r2ml:name="X"/>
               <r2ml:Variable r2ml:name="Y"/>
            </r2ml:arguments>
         </r2ml:GenericAtom>
         <r2ml:GenericAtom r2ml:predicate="brother">
            <r2ml:arguments>
               <r2ml:Variable r2ml:name="X"/>
               <r2ml:Variable r2ml:name="Z"/>
            </r2ml:arguments>
         </r2ml:GenericAtom>
      </r2ml:conditions>
      <r2ml:conclusion>
         <r2ml:GenericAtom r2ml:predicate="uncle">
          <r2ml:arguments>
               <r2ml:Variable r2ml:name="Z"/>
               <r2ml:Variable r2ml:name="Y"/>
          </r2ml:arguments>
         </r2ml:GenericAtom>
      </r2ml:conclusion>
   </r2ml:DerivationRule>
...
</r2ml:DerivationRuleSet>
```

Fig. 3. *ECAA rule described by schema and R2ML*

Method of writing the rules should be understood as follows: If event occurs and at the same time certain conditions are met, then the system should be performed some actions. Otherwise, should be executed another action.

The next step defines rules for the various control structures to describe them with the ECAA rules. This is schematically shown in the next figures 4–7.

Sequence

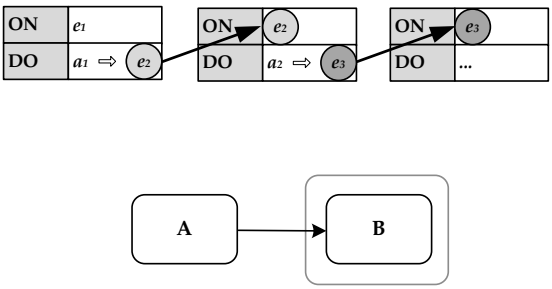

Fig. 4. *The "Sequence" schema*

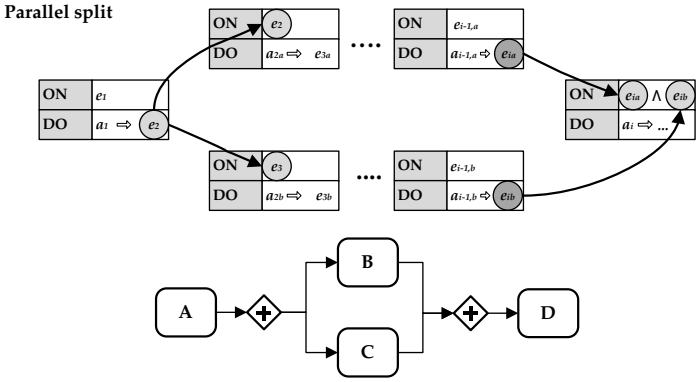

Fig. 5. *The "Parallel split" schema*

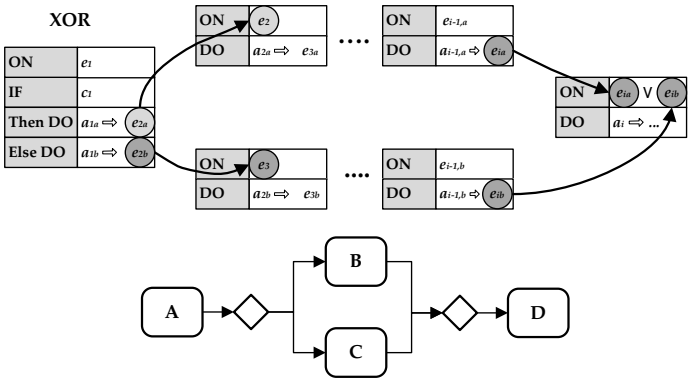

Fig. 6. *The "XOR" schema*

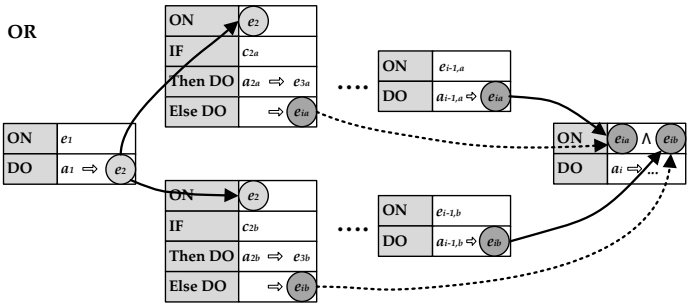

Fig. 7. *The "Alternative" schema*

Knowing the rules of writing the patterns in both languages, in the next step will be possible to build a translator between languages R2ML and XPDL.

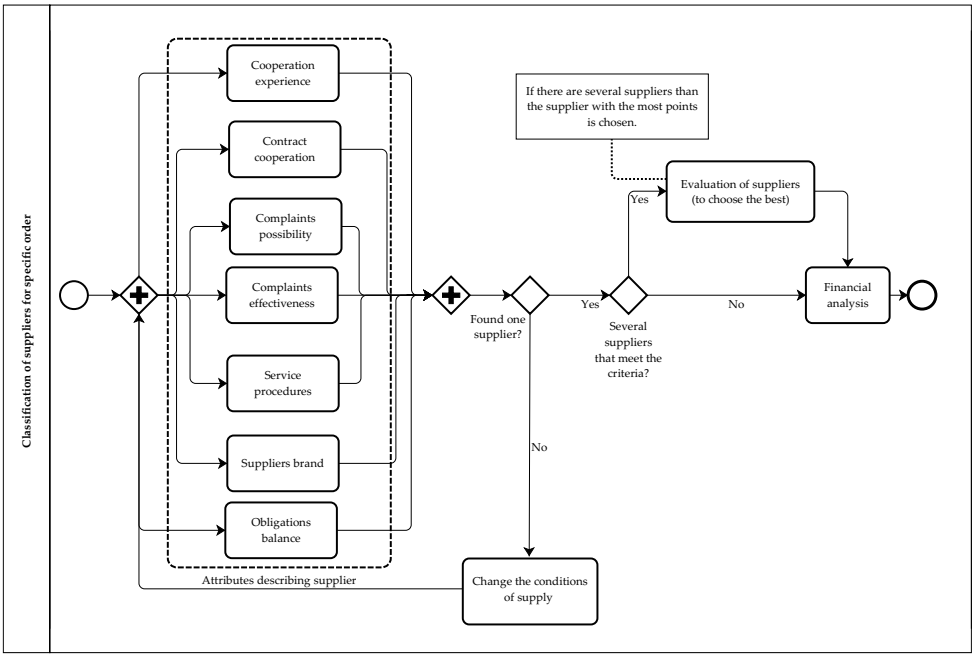

Fig. 8. *Example of the application of business rules in the process of selecting suppliers*

Figure 8 shows the way of selection of suppliers by specifies rules. In the first stage suppliers are evaluated according to seven parameters, like cooperation history, contract collaboration and other. Each of these attributes is described by a set of business rules. For example, the contract cooperation is estimated by the following rules:

- If cooperation is a permanent principal and based on contracts for long-term supplier than assign a supplier to the group A.
- If cooperation is permanent and subsidiary and covering a few to several percent of deliveries than assign a supplier to the group B.
- If cooperation is an occasional, only incidental purchases, unit transactions, than assign a supplier to the group C.

Based on the data entered into the system during the introduction of the supplier, the system will assign suppliers to the appropriate group. In case of the absence of relevant data, queries for the user are automatically generated in order to complete relevant data.

In this way, the application checks all the criteria and selects the most appropriate supplier or for the product if their number is greater one list of suppliers is produced. Due to systems based on the business rules the user is able to enter any number of parameters, as well as adapt them to changes in line with company policy.

On the basis of defined model, set of rules can be automatically generated that is not only describing individual stages, but also sequential relationships between them.

4. Summary

Results of the survey is transformation of BPMN language into business rules language. Visual language for representing business rules has been also developed. Transfer to the BPMN notation business rules standards enable to cooperate both with the logistics systems based on the business rules engines, as well as with all integrated systems like ERP, CRM, MRP or BI. It allows the introduction of dynamic changes in the system with participation only business users with no software knowledge.

References

Wagner G., Damasio C., Antoniou G. 2005. *Towards a general web rule language*. International Journal of Web Engineering and Technology.

Ram S., Liu J. 2005. *An Agent-Based Approach for Sourcing Business Rules in Supply Chain Management*. International Journal of Intelligent Information Technologies.

Trebilcock B., Rogers L. K. 2009. *Top 20 supply chain management software suppliers*. Modern Materials Handling.

Filograna A., Giunta G., Indraffia N., Loiacono L. 2007. *An integrated approach for modeling business processes using BPMN and XPDL standards*. 2th KMO Conference, Knowledge Management in Organization, Lecce.

Milanović M., Gašević D., Wagner G. 2008. *Combining Rules and Activities for Modeling Service-Based Business Processes*. International Workshop on Models and Model-driven Methods for Enterprise Computing (3M4EC), in conjunction with The Twelfth IEEE International EDOC Conference (EDOC 2008), Munich, Germany.

Nowak J. 2009. *Charakterystyka procesów i decyzji technologicznych podejmowanych w logistyce produkcji*. WZ AGH.

Documentation of BPMN, OMG: `http://www.bpmn.org/Documents/OMG\%20Final\%20Adopted\%20BPMN\%201-0\%20Spec\%2006-02-01.pdf` (accessed November, 2009).

Documentation of BPEL, Oasis: `http://docs.oasis-open.org/wsbpel/2.0/wsbpel-v2.0.pdf` (accessed November, 2009).

Documentation of MDA, OMG: `http://www.omg.org/mda/specs.htm` (accessed November, 2009).

Documentation of OCL, OMG: `http://www.omg.org/spec/OCL/2.0/` (accessed November, 2009).

Documentation of RuleML, The Rule Markup Initiative: `http://ruleml.org/0.7/` (accessed November, 2009).

Documentation of R2ML, The REWERSE I1 Rule Markup Language: `http://oxygen.informatik.tu-cottbus.de/R2ML/0.5/R2ML.xsd` (accessed November, 2009).

Documentation of SBVR, OMG: `http://www.omg.org/spec/SBVR/1.0/` (accessed November, 2009).

Documentation of XPDL, Workflow Management Coalition: `http://www.wfmc.org/index.php?option=com\_docman\&task=cat\_view\&gid=42\&Itemid=72` (accessed November, 2009).