MECHANICS
Vol. 24 No. 2 2005

Wiktor Marek ZAWIESKA*

THE ACTIVE NOISE CONTROL ISSUES RELATED TO THE NOISE GENERATED BY THE POWER TRANSFORMERS

SUMMARY

The paper presents vibroacoustic tests of power transformers with regard to active reduction of their noise. Basic sources of vibroacoustic energy are determined and a system of active reduction of noise (ANC) emitted by power transformers, developed by CIOP-PIB, is presented. Moreover, the results of preliminary tests of the system in real conditions are presented.

***Keywords**: power transformers' noise, active noise control, control algorithms, effectiveness of ANC system*

PROBLEMY AKTYWNEJ REDUKCJI HAŁASU EMITOWANEGO PRZEZ TRANSFORMATORY ENERGETYCZNE

W artykule przedstawiono opracowany w CIOP-PIB system aktywnej redukcji hałasu emitowanego przez transformatory energetyczne. Omówiono wyniki analizy przepływu energii wibroakustycznej w transformatorach oraz struktury zrealizowanych wariantów systemu ze szczególnym uwzględnieniem układu kontrolera i algorytmu sterującego. Przedstawiono również wyniki badań laboratoryjnych systemu z wykorzystaniem modelu transformatora oraz badań w warunkach rzeczywistych dla dwóch typów transformatorów energetycznych.

1. INTRODUCTION

For many years, the author of this paper, along with co-worker team, has conducted conducts scientific research employing the active noise control methods [20, 21] to control the noise generated by the power transformers [18].

This research included, among other things, a detailed analysis of vibroacoustic energy sources in the power transformers, with special attention paid to the energy main source – power transformer casing panels. After detailed theoretical analysis of sound radiation, the active noise control system has been developed for the power transformer, consisting of the multichannel controller, measuring and actuating components. The system has been researched in a laboratory and actual conditions.

2. THE ANALYSIS OF VIBROACOUSTIC ENERGY SOURCES IN THE POWER TRANSFORMERS

The power transformers are widely used in the power industry, power systems and electric systems. The issues presented in this paper refer to the problems of eliminating the power transformer noise emitted to the environment.

This noise is mainly a low frequency narrow band noise, and the noise spectrum includes the tonal components of the frequency being the multiple of the power line frequency.

The power transformers have many sources of vibroacoustic energy.

The most important sources include:

- the transformer core vibration as an effect of the magnetostriction phenomena;
- the transformer winding vibration as an effect of the electrodynamic forces;
- the devices of the transformer cooling system, as fans, oil pumps.

Usually, the sinusoidal currents flow in the power transformer windings, and this generates the electrodynamic forces with dominating frequency of fs = 100 Hz [1]. The oscillation generating conditions in specialized transformers (e.g. rectifying transformers) are quite different, as distorted current flows through their windings, and the transformer core is additionally magnetized by the constant component of the current, and this significantly increases the vibroacoustic energy generated by the transformer. When analyzing the mechanisms of the vibroacoustic energy generation, it should be noted that starting from the transformer core vibration, through vibration and sounds of the housing and cooling system, the vibroacoustic energy emitted to the environment is received. For the power transformers without housing, the vibrating core and windings emit the vibroacoustic energy directly to the environment. Usually the core and windings of the power transformer are placed in a special housing, acting commonly as the oil tub with the oil cooling the transformer components. The oil cooled transformers have various housings, and the differentiation is a result of the rated power, shape, size and building components of the transformer.

The vibroacoustic energy flow in the power transformers is presented in Figure 1.

It can be assumed that the vibroacoustic energy in the power transformers is transferred mainly to the housing. Therefore we simplify the issue by assuming that the vibroacoustic energy is radiated (emitted) to the environment by the housing. By making further simplifications we can say that the housing is a cuboid-shaped and is made of a thin metal sheet. The vibration of the upper and bottom housing plates is low, and we will consider the vibration generated by the side walls.

The research conducted recently by the author and the research team referred only to the sound generated by single side wall. It was assumed that the housing side wall is a thin homogenous rectangular plate oscillating at the frequencies being the poliharmonics of the power line nominal frequency.

* Central Institute for Labour Protection – National Research Institute, Warsaw, Poland, mazaw@ciop.pl

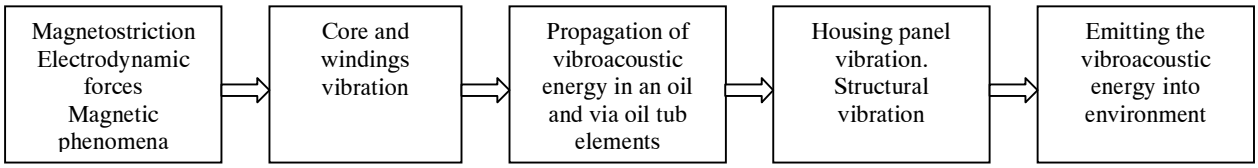

Fig. 1. The flow of vibroacoustic energy sources in the power transformers

3. ACTIVE NOISE CONTROL SYSTEM

For such noise source as the power transformer, several active noise control system [3, 8, 11, 12, 16, 17] designs can be developed, differing mainly in:

- the controller structure,
- the control software for the controller,
- the secondary source quantity and location,
- the reference and error signal detector locations.

The controller and control algorithm structure significantly affect the quality (technical specifications) of the system [6, 9, 12, 13]. The Central Institute for Labour Protection – National Research Institute developed and performed the test bench for the active noise control system research in the laboratory environment. The primary component of the test bench is the digital multichannel controller and conditioning circuit, enabling several measuring components (microphone) and active components (amplifiers and speaker systems) to be connected [18].

The system block diagram is presented in Figure 2.

Actually, the active noise control system has to minimize the error signal $e(n)$, being the difference between the reference signal $d(n)$ on the acoustic channel output (between the transformer noise detector and the secondary source location) and signal $y(n)$ on SOI filter output (filter with a finite impulse response), achieved as a result of the reference signal $y(n)$ processing. The problem is to select the most appropriate filter coefficients for maximum system effectiveness [10, 13].

For the narrow band sources (including the power transformer), emitting the periodical noise, of which an acoustic energy is grouped around discreet frequency values, it is possible to synthesize the reference signal equivalent, that eliminates the classical detector – microphone. The electric power supply or the signal from the power transformer is an information source for the controller.

The synthesizers or periodical signal generators are used as the reference signal generators for the narrow band system controller, synchronized with the signal emitted by the noise source [15]. The function generator may generate both periodical non-sine signals (e.g. pulse signals) at the frequency that equals the frequency of the noise source, or sine signals corresponding to the constant signal component and their harmonics.

Three controller structures have been developed and examined in CIOP-PIB:

1) the circuit with narrow band wave shape synthesis,
2) direct circuit with reference signal generator,
3) parallel circuit with adaptive cut-off filters.

Figure 3 presents one of the first digital active noise control systems made and tested in CIOP, i.e. the narrow band circuit with a wave shape synthesis.

The compensating signal $y(n)$ being a result of filtering $x(n)$ signal by the adaptive SOI filter of L rank is presented below

$$y(n)=\sum_{i=0}^{L-1} W_i(n)\cdot x(n-i)= \\ =\sum_{i=0}^{L-1} W_i(n)\sum_{k=N+1}^{N-1}\delta(n-kN-i) \tag{1}$$

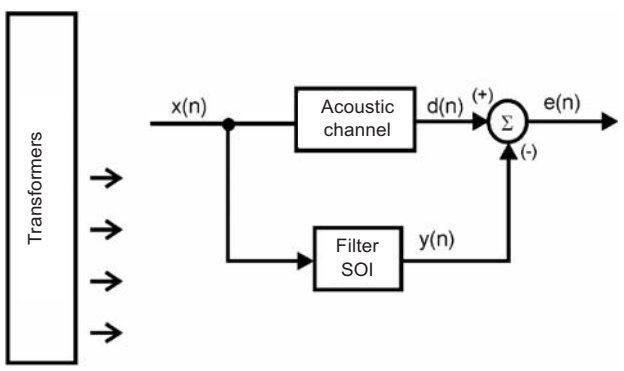

Fig. 2. The block diagram of the active noise control system incorporating the adaptive digital controller

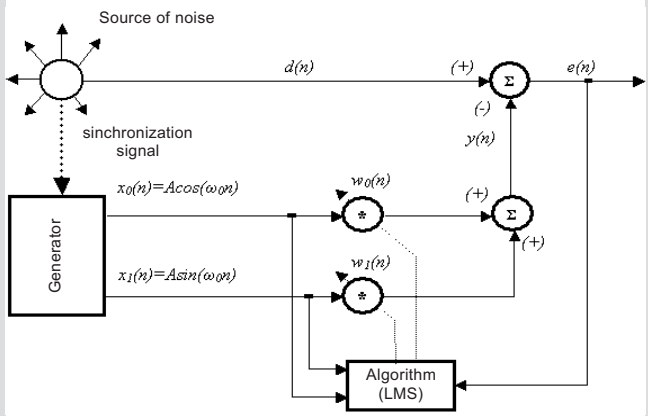

Fig. 3. The active noise control system with compensating signal synthesis circuit

The L rank equals the number of pulses N falling within the reference signal To range. If this is the case, the equation (1) is expressed as below

$$y(n) = W_{n \bmod L}(n) \tag{2}$$

The values of the adaptive filter coefficients have been updated with LMS algorithm according to the formula

$$\mathrm{W_i}(n+1) = W_i(n) + \mu x(n-i) e(n) \tag{3}$$

where $i = 0, 1, \ldots, L-1$.

For the reference signal, the formula (3) can be simplified as follows

$$\mathrm{W_i}(n+1) = \begin{cases} W_i(n) + \mu e(n) & i = n \bmod L \\ W_i(n) & i \neq n \bmod L \end{cases} \tag{4}$$

The block diagram of the active noise control system with controller for the power transformer from the Figure 3 is presented in Figure 4.

The other two controller structures have been analyzed in similar way. The analysis conducted and its results enabled working out the final controller versions with the control software and active noise control system components. This complete system has been launched, tested in laboratory and further in real environment.

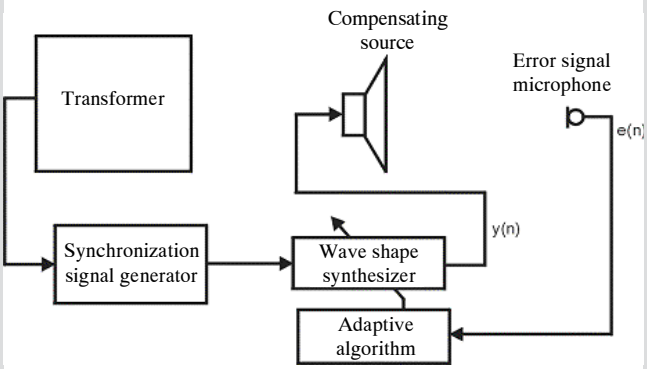

Fig. 4. The block diagram of the active noise control system incorporating the wave shape synthesis algorithm

4. LABORATORY TESTING

The developed active noise control system has been subject to thorough laboratory testing using the transformer model (speaker matrix) [15]. The measurements have been performed for all three controller structures as mentioned above and for various geometric configurations covering the transformer model, compensating (secondary) source, and error signal microphone locations. For all controller structures the error signal has been reduced i.e. the noise against the background noise level in the microphone location.

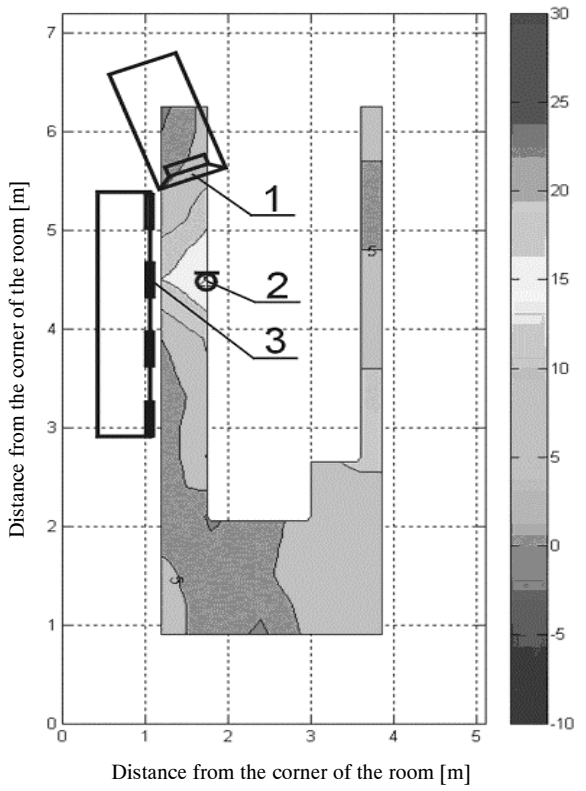

Fig. 5. The active noise control system effectiveness map in laboratory environment: 1 – secondary source, 2 – error signal microphone, 3 – transformer model

The size and special shape of zones with active noise reduction effect depends on special configuration of the system components. The best effect has been achieved for the secondary source located in direct vicinity of the noise source (transformer model). Such a configuration is presented in Figure 5.

White zones on this figure indicate the space where the measurements could not be performed as it was occupied by the laboratory equipment. The ANC (active noise control) system effectiveness map presents the results obtained during tests with the wave shape synthesis circuit based controller (for two remaining controller types the results have been analogical). As expected, the highest noise reduction of 15 dB has been achieved within the direct error microphone vicinity.

5. REAL ENVIRONMENT TESTING

After the laboratory testing, the developed system has been used to reduce the low frequency noise emitted by the power transformers in real environment conditions.

The measurements have been performed for two transformer types:

1) air cooled type, installed in the power stations inside the office buildings (Fig. 6),
2) oil cooled type, open-air installed in the power station premises (Fig. 7).

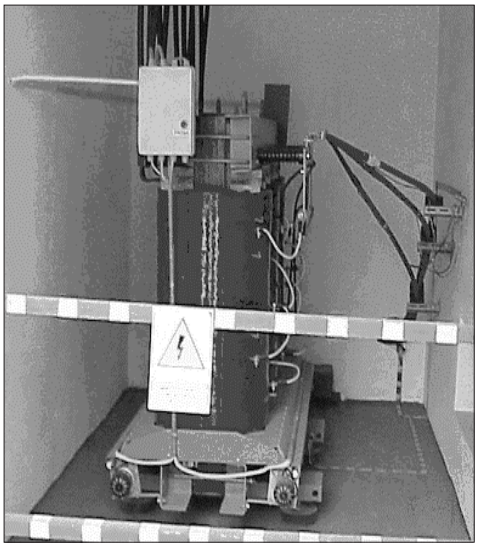

Fig. 6. The power transformer installed inside the transformer station

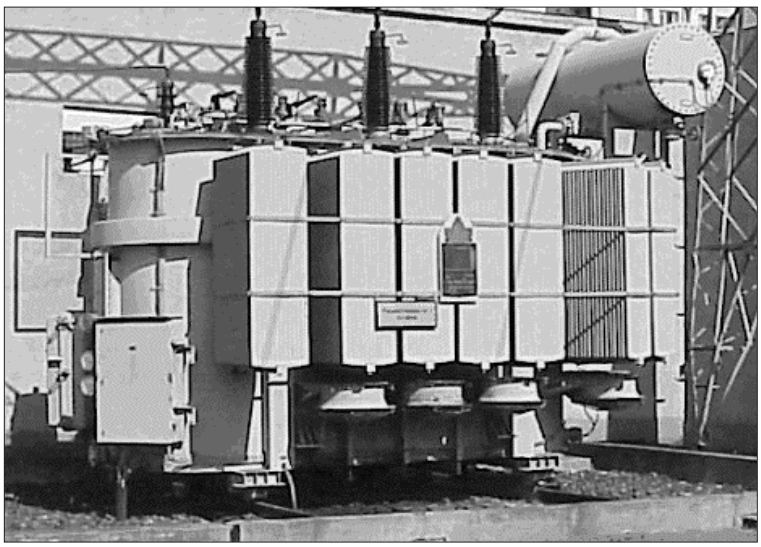

Fig. 7. Open-air installed power transformer

The parameters of noise emitted by those transformers are typical for the active noise control systems applications. However, when applying the developed ANC system to reduce the noise emitted by 1000 kVA air cooled power transformer, installed in the transformer station, significant limitations occurred that made it difficult to obtain satisfactory results.

These limitations included:

- very significant transformer noise spectrum changes related to changes in the transformer load; these changes included noise spectrum component level changes and their periodical appearing and disappearing;
- variable noise of a variable, high level, penetrating from outside of the transformer room; the source of the noise – cars passing by and parking, other local infrastructure devices, operating in the direct vicinity of the transformer door;
- limited room sizes with the transformers installed, disabling installation of ANC system measuring and actuating devices due to safety distance observations, mentioned in the safety code.

On the other hand, such an environment is an ideal testing environment, and we will use it in the future for further development and modification of individual components of developed ANC system.

The ANC system with previously mentioned configurations has been tested in the environment as above. The ANC system effectiveness has been tested for various reference signal generating methods. For each tested control algorithm, the most advantageous parameter values have been determined, including:

- the adaptive filter rank,
- the adaptation step values,
- sampling frequency,
- gain values for individual channels.

The tests indicated that application of the wave shale [13] synthesis based controller makes it impossible to achieve the satisfactory results in a long time. High noise from outside of the transformer room resulted in very low separation of the harmonics generated by the transformer and the background noise (some dB). The active noise reduction for such low values requires assuming very low correction step values. This is due to the effect of correction step value on RMS error deviation. The wave shape synthesis based controller is very sensitive to correction step value, due to the method of updating the sample values in the synthesizer buffer. Updating single sample of the compensating wave sample in single algorithm cycle causes that converging the buffer content to the optimum form is very slow for low correction step values. As a consequence, the described controller operated properly provided that the transformer load change and outside noise related spectrum changes have been slow.

This property makes it impossible to use those controllers in such ANC systems for power transformers in real environment, as such a system should operate correctly regardless of ambient conditions. Much more better results have been achieved for two remaining controller types, but for the cut-off filter controller the harmonics have always been reduced to the background level. Moreover, to provide a more difficult operating environment for the controller, some jamming signals have been intentionally introduced when synchronizing the controller with the noise source (transformer), and the reference signal of several tonal signals has been used.

Figure 8 presents an example of acoustic spectrum of the noise generated by the tested transformer and the effectiveness of ANC system, with the controller using an internally generated reference signal and direct form filter. The reference signal included tones of 100 Hz, 200 Hz, and 300 Hz.

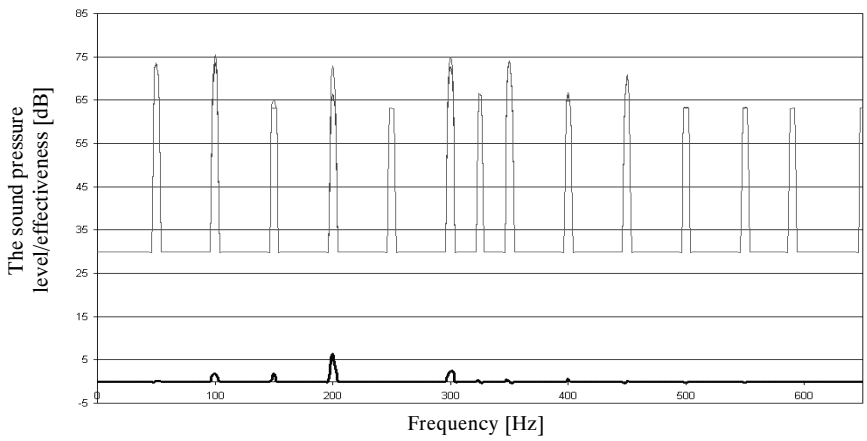

Fig. 8. The acoustic spectrum of the transformer 1 noise and effectiveness of ANC system with internally generated reference signal controller (reference signal of 100, 200 and 300 Hz)

The following adaptive algorithm parameters have been assumed

– filter length $L = 6$,
– sampling frequency = 8 kHz,
– adaptation step $\mu = 10^{-11}$.

The filter coefficients have been updated sequentially for each given harmonics when testing the system presented in Figure 8. The reference signal has also been synchronized with an input (noise) signal by feeding the synchronizing signal directly from the power line. This reduced the effect of "drifting" of spectral lines in the tested transformer noise spectrum.

The results of the measurements as above have proved that the active noise reduction can be achieved simultaneously for single tones and several harmonics of the periodical noise spectrum.

The detailed analysis of the results achieved for various system setups has shown that it is possible to achieve active noise reduction for selected transformer noise harmonics components even at no synchronization at all. This is possible due to high stability of the power line rated frequency against to adaptive properties of currently used controllers. However, the synchronization can be omitted only when single tone is to be eliminated. For simultaneous reduction of several harmonics components the controller reference signal must be absolutely synchronized with the noise source.

The configuration presented in Figure 9 has been used when testing the ANC system for the open-air power transformer.

The startup procedure has been performed for the controller with adaptive cut-off filters before measurements. The algorithm has been validated for individual signal components falling in the system operating range, by setting the proper error microphone distance from the secondary source, and defining the phase shifts between the compensated and compensating circuit, separately for each harmonics.

The example ANC measurement results for the layout 1 (Fig. 9) have been presented in Figure 10 with three charts:

1) the transformer noise spectrum for deactivated ANC system (a),
2) noise spectrum for activated ANC system (b),
3) effectiveness of ANC system calculated as a level difference at ANC ON and OFF (c).

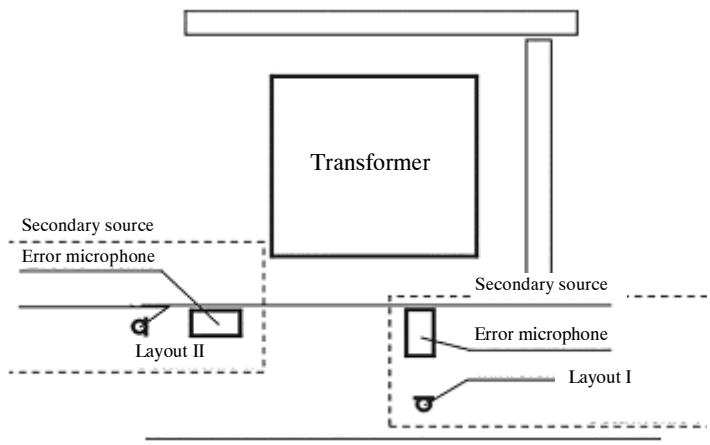

Fig. 9. The error signal microphone and secondary source locations when testing the system in real environment

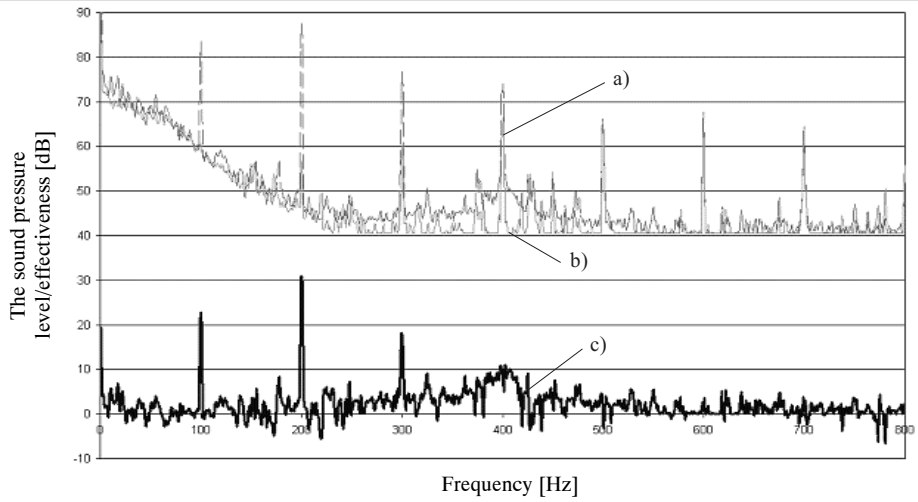

Fig. 10. The sound pressure level vs. frequency for the open-air transformer for: a) deactivated ANC system; b) activated ANC system; c) effectiveness of internally generated reference signal (100, 200, 300, 400, 450 and 500 Hz) ANC system (layout 1)

Similar results have been achieved for layout 2. Similarly to the previously described testing of transformers installed indoor, the measurements have been performed for various controller parameters, including its behavior when various transformer noise harmonics are reduced.

The total maximum achieved effectiveness of ANC system was 11 dB (linear scale) for the layout 1 and 13 dB for the layout 2. The active reduction zones are similar to the spherical zones with diameter of about 1 m. These zones for the layout 1 and 2 are presented in Figure 11.

The measurements have been conducted 1 m above the floor level. During the tests, the ANC system operated in two-channel mode (two error signal microphones and two secondary sources). The area was limited from one side by the transformer, and from other side by remaining power station equipment. The measurements have shown that the silent zone, determined by 3 dB noise reduction level, are the cones with the solid angle of about 15°. The measurement results for two-channel mode correspond to the results achieved for single channel mode for two secondary source layouts. It means that multichannel systems enable active noise reduction zone improvement by proper selecting the secondary source locations, so that the active zones related to each source are not overlapping. It should be noted that the approach with overlapping the active zones to improve ANC system effectiveness is not correct, as the interactions of secondary sources deteriorates the results.

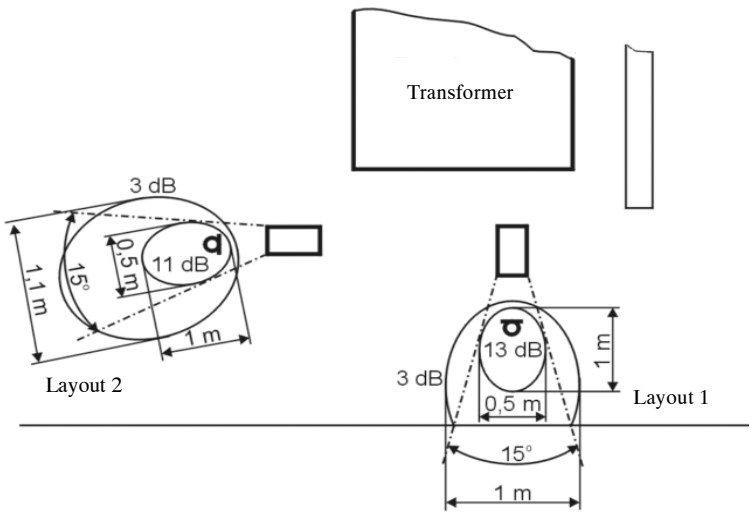

Fig. 11. The active reduction zones measured for ANC system operating in two-channel mode

6. SUMMARY

During the laboratory testing of the power transformer model, for three controller structures developed in CIOP-PIB the narrow band noise has been reduced to the background level in direct microphone vicinity. For the secondary source layout in the power transformer vicinity, the global active noise reduction effect has been achieved. The noise level has been reduced from 5 to 15 dB in an entire laboratory room.

In real environment testing the best parameters have been achieved by employing the ANC system configured as the narrow band system with parallel adaptive cut-off filters. This system enabled active noise reduction locally for almost any location of active element and microphone. The noise reduction effectiveness for the harmonics up to 500 Hz was up to 30 dB, and for the linear scale the sound pressure level has been reduced from 11 to 13 dB. The shape of zones with active noise reduction effect depends on the power transformer acoustic parameters, mutual location of transformer, secondary source and microphone, and also acoustic environment parameters.

The global noise reduction effect can be achieved, when the secondary source is located in direct noise source vicinity, to directly affect the noise source radiating characteristics. The results of measurements performed in laboratory and real environment prove the effectiveness of developed ANC system and its control algorithms. Further CIOP-PIB developments in this domain will be focused on improving and increasing the active noise reduction areas.

References

[1] Angevine O.L.: *Active acoustic attenuation of electric transformer noise.* Proc. Inter-Noise 81, 1981, 303–305

[2] Berge T., Pettersen O,Kr.O., Sorsdal S.: *Active noise cancellation of transformer noise.* Proc. Inter-Noise 87, 1987, 537–540

[3] Brungardt K., Vierengel J. & Weissman K.: *Active structural acoustic control of noise from power transformers.* Proc. Noise-Con 97, June 1997

[4] Byczkowska-Lipińska L., Majer K., Bagiński A.: *Badania eksperymentalne hałasów transformatorów.* III konferencja, 1998, 181–184

[5] Byczkowska-Lipińska L.: *Zjawiska wibroakustyczne w transformatorach energetycznych i ich wpływ na zagrożenie środowiska naturalnego.* Akustyka w technice, medycynie i kulturze, Kraków 1999, 191–194

[6] Douglas S.C.: *A family of normalized LMS algorithms.* IEEE Signal Processing Letters, 1 (3), March 1994, 49–51

[7] Engel Z., Makarewicz G., Morzyński L,. Zawieska W.M.: *Metody aktywne redukcji hałasu.* Warszawa, Wyd. CIOP 2001

[8] Hesselmann N.: *Investigation of noise reduction on a 100 kVA transformer tank by means of active methods.* Applied Acoustics, 11 (1), 1978, 27–34

[9] Hulings III W.J.: *Noise cancellation technologies.* Inc. – products and developments, Proc. Inter-Noise 94, August 1994, 2201–2202

[10] Koers P.H.J., Overbeek M.W.R.M., Hof J.: *The performance and some physical mechanisms of an active control system for quasi-periodic noise.* Proc. Inter-Noise 88, 1988, 1029–1032

[11] Kopff M., Kopff P.: *Using mechanical anti-noise sources for canceling the harmonic part of the sound radiated by electric machines.* Proc. Inter-Noise 88, 1988, 1069–1072

[12] Kuo S.M., Jiang X. H.: *Secondary path modeling technique for transformer active noise control.* Proc. Inter-Noise 95, Newport Beach, USA, 1995, 505–508

[13] Kuo S.M., Morgan D. R.: *Active noise control systems – algorithms and DSP implementations.* Wiley Series in Telecommunications and Signal Processing, John Wiley and Sons, 1996

[14] Lee S.M., Lee H.J., Yoo Ch. H., Youn D.H., Cha I. W.: *An active noise control algorithm for controlling multiple sinusoids.* J. Acoust. Soc. Am., 104 (1), 1998, 248–254

[15] Makarewicz G., Morzyński L.I inni: *Optymalizacja układu aktywnej kompensacji parametrów pola akustycznego pod kątem stabilności pracy w warunkach rzeczywistych, sprawozdanie z zadania badawczego 03.8.11 wykonanego w ramach Programu Wieloletniego „Bezpieczeństwo i ochrona zdrowia człowieka w środowisku pracy”.* Warszawa, Centralny Instytut Ochrony Pracy 1998–2000

[16] Makarewicz G., Morzyński L., Matuszewski G., Zawieska W.M.: *Metody redukcji hałasu transformatorów energetycznych.* Bezpieczeństwo Pracy, 12, 1999, 2–6

[17] McLoughlin M., Hildebrand S., Hu Z.: *A novel active transformer quieting system.* Proc. Inter-Noise 94, August 1994, 1323–1326

[18] Zawieska W., Makarewicz G. i inni: *Sprawozdanie z realizacji zadania badawczego 03.8.12 pt. „Analiza i synteza układu aktywnej redukcji hałasu wytwarzanego przez transformatory energetyczne”.* Punkty kontrolne 1, 2 i 3, lata 1999–2001

[19] Zawieska W., Gawlik M., Kosała K.: *Zagrożenia wibroakustyczne spowodowane pracą transformatorów.* Kwartalnik AGH Mechanika, t. 20, z. 2, 2001, 261–275

[20] Zawieska W.: *Active noise control methods in Poland.* Archives of Acoustics, vol. 29, No. 2, 2004, 317–345

[21] Zawieska W.: *Analiza i synteza układu do aktywnej redukcji hałasu.* Kraków, AGH 1991 (praca doktorska)