MECHANICS
Vol. 26 No. 3 2007

Janusz TUŚNIO*, Zbigniew KORUBA*

GENERATION AND REDUCTION OF SLOW-VARYING DISTURBANCES AFFECTING THE OPERATION OF SYSTEMS FOR DETECTION AND LOCATION OF ELECTROMAGNETIC FIELDS FROM OVERHEAD POWER LINES

SUMMARY

The paper is concerned with the development and testing of a system for detection and location of overhead power lines. It was necessary to analyze the occurrence of disturbance signals affecting the operation of the system in motion and establish the effectiveness of monolithic active filters employed to reduce these disturbances.

Keywords: *power lines, detection, disturbance reduction*

POWSTAWANIE I REDUKCJA WOLNOZMIENNYCH SYGNAŁÓW ZAKŁÓCAJĄCYCH PRACĘ URZĄDZEŃ DO WYKRYWANIA I LOKALIZACJI NAPOWIETRZNYCH URZĄDZEŃ ELEKTROENERGETYCZNYCH

W opracowaniu przedstawiono konstrukcję i wyniki badań urządzenia wykrywającego napowietrzne linie elektroenergetyczne. Opisano sygnały zakłócające pracę urządzenia w warunkach jego ruchu i podjęto próbę wyjaśnienia przyczyn ich powstawania, a także przedstawiono koncepcję i praktyczną realizację opartą na monolitycznych filtrach aktywnych układów redukujących te zakłócenia.

Słowa kluczowe: *linie elektryczne, wykrywanie, redukcja zakłóceń*

1. INTRODUCTION

The achievements of modern civilization have mainly been due to the use of electrical energy. In spite of the great advances in the development of local sources of energy such as fuel or photoelectric cells, almost all energy is generated at power stations and transmitted over long distances through overhead power lines at medium and large voltages. Although the lines are of great economic importance, they pose a threat to low-flying planes, motor glides and other aerial vehicles. They may also cause disturbances and, in consequence, improper operation of various control and measurement systems as well as medical equipment. Another important problem is the fact that power lines emit electromagnetic fields, and prolonged exposure to EMR is known to have adverse effects on living organisms. During warfare, power grids are primary targets especially for air power, as their destruction paralyzes rail transport and industrial production.

Flying objects need to be equipped with measurement devices for detection and location of power lines, as there is a danger of collision with such obstacles. The reliability and precision of these devices is essential, particularly in wartime when power lines need to be destroyed by means of missiles, aerial cluster bombs or unmanned combat aerial vehicles [9, 10]. High speed combat maneuvers require that such obstacles and targets be detected and located at a distance of at least 1000 m. It is vital to employ high-sensitivity measurement instruments able to suppress disturbance signals originating from transmission lines or, in wartime, the masking noise purposefully produced to protect them. The performance of such a system needs to be verified under real conditions. During transport and operation, it may be exposed to climatic changes, for instance different temperatures, moisture content, and frost. It may suffer mechanical damage, e.g. substantial overloads and surges, as well. All these effects have to be taken into account.

The aim of the investigations was to develop a measurement system for effective detection and location of overhead power lines. Active filters were applied to reduce the disturbance.

2. SCOPE OF THE STUDY

Overhead high-voltage transmission lines are technological devices emitting electric and magnetic fields with a frequency of 50 Hz. The intensity of the electric field is constant in time and proportional to the electric voltage along the length of a transmission line; it depends on the distance from the source of the field and the shield configuration such as earthed support structures and transmission pylons. The intensity of the magnetic field, on the other hand, is proportional to the voltage of the electric current and varies according to the power line load. A sudden fall in the field intensity may be reported when a pylon structure characterized by shield properties is approached or the distance from the line axis has increased. Nearby trees, shrubs or buildings with shield properties may cause a substantial decrease in the intensity of the electric field [7]. Moreover, the intensity of these fields vary depending on the height at which a measurement is ta-

* Faculty of Mechatronics and Machinery Design, Kielce University of Technology, Kielce, Poland; ksmzkoe@tu.kielce.pl

ken, the height being in the range 0.5–2.0 m above the ground. The investigations conducted within the framework of the research project described in Ref. [8] show that the value of the electric field intensity measured close to a high- or medium-voltage transmission line increases almost linearly with the height above the ground. Due to the fact that the electric field intensity is mainly dependent on the voltage and not dependent on the line load, it can be assumed that it is the electric field Zintensity that makes target detection and location possible.

3. DESCRIPTION OF THE MEASUREMENT SYSTEM AND INITIAL TEST RESULTS

An initial study was carried out to determine the relationship between the changes in the electric field intensity and the distance from the signal source, i.e. an overhead power line. A special-purpose measurement amplifier was developed. As can be seen from the diagram in the Figure 1, the main element is a 'new-generation' integrated circuit of the INA128PA type made by Burr–Brown (W1). The first-stage amplification K_1 of up to 10 000 is adjusted by means of a Helipot multi-turn potentiometer R_0. The coil employed as the sensor of the measurement path consists of 4100 turns of enamel-insulated Cu wire with a diameter of 0.17 mm. The coil was mounted to the core of annealed low carbon steel wire with a diameter of 10 mm and a length of 150 mm. The ends of the core were connected directly to the corresponding inputs of the measurement amplifier. An attempt was made to employ a ferrite core, yet, due to its susceptibility to crack growth under large overloads, the idea was abandoned at an early stage. The sensor inductivity, L, and capacity C_1 constitute a resonant circuit with a frequency of 50 Hz.

The operational amplifier, W_2, being part of the OP290GP system was employed for the second-stage amplification, K_2, equal to 1000. The maximum total amplification K_{max} was 107. The resistance-capacity method of coupling (R_3, C_2) was used for the two stages of amplification.

The measurement amplifier was powered by a single 12 volt battery. As can be seen from Figure 1, the operational amplifiers require a double voltage supply. It was necessary to construct an active voltage divider using the rest of the OP290GP amplifier. As a result, it was possible to establish the virtual mass point with regard to which the voltages supplied to the amplifier were +5 V and –5 V. The diagram of the active divider is not included in this paper.

Since the tests involved measuring an alternating signal, it was necessary to establish the artificial mass potential. The other part of the OP290GP system was used to construct an active divider of the voltage supplied. The output of amplifier W_3 constitutes the virtual mass point, which the voltage signal was referred to. The signal was induced in the antenna, Ant, and amplified at the outputs of amplifiers W_1 and W_2. A schematic diagram and detailed description of this measurement system can be found in Refs. [8, 10].

It was necessary to determine the effects of a transmission line on the value of voltage induced in the receiving antenna of the measurement system. A field study was conducted in the vicinity of medium and high voltage lines (15 kV and 110 kV). As shown in Figure 1, the voltage was measured at the output of amplifier W_1. However, if the distance from the signal source was bigger, it was measured at the output of amplifier W_2. The voltage induced in the coil was calculated by dividing the alternating voltage of 50 Hz at the output of amplifier U_{wy} by the coefficient of amplification: $U_A = U_{wy}/K$. Figure 2 shows the results of measurements of the voltage induced in the coil of the measurement system presented in the Figure 1.

The performance of the measuring device was reported to be dependent on the distance from the medium-voltage power line (up to 15 kV), or rather, its horizontal projection.

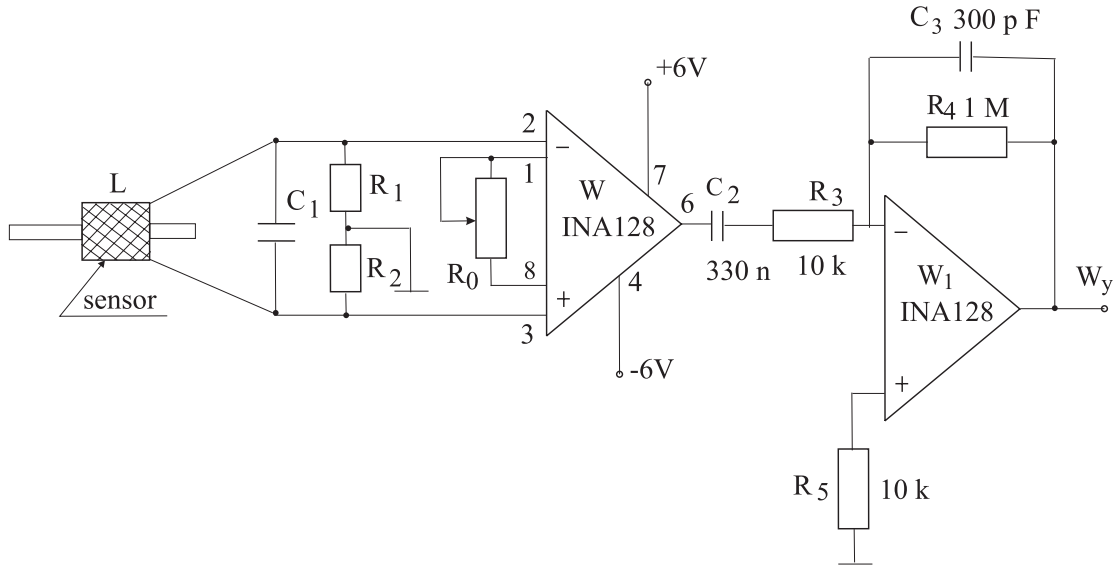

Fig. 1. Schematic diagram of a measurement amplifier

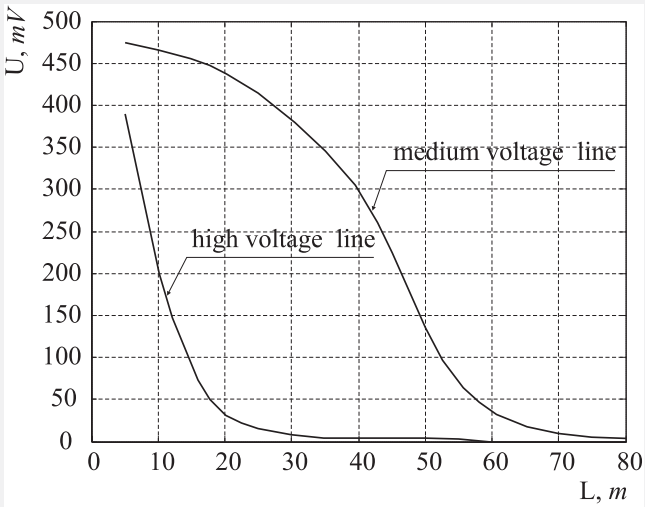

Fig. 2. Relationship between the voltage induced in the coil, *U*, and the distance from a medium-voltage line (up to 15 kV) and a high--voltage line (up to 110 kV), *L*

The relationship between the distance and the device performance was clear and nonlinear. The voltage was found to fall rapidly, when the device was at a distance of up to 20 m and moved away from the line. When the distance was more than 20 m, the decrease in the voltage was steady and approximately linear. At a distance of more than 50 m, a number of various disturbance signals were recorded, so the signal became practically non-measurable.

An extremely nonlinear relationship between the voltage induced in the coil and the distance from the line was reported also for high-voltage transmission lines (up to 110 kV). The signal became measurable at a distance of 80–100 m from the transmission line. The tests were conducted under stationary conditions when the measurement system was at idle. If the system is to be mounted on board of an aerial vehicle as part of a unit for detection and location of transmission lines, its sensitivity needs to be higher than that obtained during the tests. The amplitude of the disturbance signals was found to be higher that the amplitude of the useful signal, therefore it would be unadvisable to increase the amplification of the measurement path above 10^6 [V/V].

Before the construction work could be continued, the model system had to be tested at a brisk walking pace as well as at a running pace. The aim was to determine how mechanical overloads affected the system operation. The tests were conducted at distances from the line where the signal was still measurable under static conditions. The system was reported to malfunction both at a brisk walking pace and at a running pace. The disturbances occurring at the output of the measuring system were characterized by a low frequency, which was difficult to determine, and an amplitude much higher than that of the useful signal. At a distance of about 60 m from the high-voltage power line (up to 110 kV), the amplitude of the disturbances was nearly 100 times higher than that of the useful signal. The disturbances affected the performance of the measuring system substantially, so it was unsuitable for the detection of transmission lines. A high amplitude of disturbance signals in open terrain could result in complete disorientation of the pilot.

As it was necessary to determine whether the disturbances were not owing to the nearby power lines or high-voltage receivers, the tests were conducted in a remote area at a distance of at least 1 km from the power line. Strong disturbance signals occurred during brisk walking, running or ladder climbing. The occurrence of the useful signal was not reported, not even under stationary conditions. To find the source of disturbances, it was essential to conduct laboratory tests again. The sensor and the amplifier of the measuring system had to be tested first. The output signal of this amplifier was sent to an oscilloscope, and the plate with the initial amplifier was attached to one end of a wooden bar several dozen centimeters in length. The bar was then moved vigorously in the vertical or horizontal directions. The voltage signal with a frequency of an order of several to several dozen hertzs was reported to occur when the bar was moved vigorously, because the plate with the measuring amplifier changed its location in space. It was thus assumed that the voltage disturbances of a low frequency induced in the antenna could be attributable to the fact that the sensor (antenna) was quickly crossing the lines of force of the Earth's magnetic field.

The laboratory tests showed that the system was susceptible to disordered disturbances in the form of electrostatic discharges generated by rubbing the system casing with a charged fabric. Disturbances of this type were also generated by the flow of air through the nozzle and around the casing. This finding is of great importance because such signals may affect the operation of a measuring device mounted on board of an aerial vehicle.

4. SELECTING THE FILTER SYSTEM AND REDUCING THE DISTURBANCE SIGNALS

The disturbance signals caused by the motion of the measurement system and those generated by electrical equipment operating in the system vicinity may have various frequencies that are difficult to predict. At the same time, the signals may be characterized by considerable amplitudes much higher than that of the useful signal. The greater the distance from a power line, the more undesirable the effect is. It was necessary to select and apply a suitable band filter that would be able to isolate and let the useful signal pass through and, simultaneously, suppress the disturbances. Model systems of the active filters had to be constructed and tested under laboratory conditions. Their suitability was checked at the subsequent stages of the investigations. It should be noted that the greater the difference between the frequency of the useful signal and that of the disturbance signals, the more correct the simple filters proved. Disturbance signals interfering with signals with similar frequencies had to be isolated by means of filters with an amplitude characteristic that is flatter in the pass band and has a very steep slope in the transition region between the pass and the barrier bands. Simple cas-

cade-coupling of the RC filters was not sufficient, because the initial impedance of each section overloaded the previous one. Using impedance transformers (separators) between the component sections was an ineffective solution. The bend of the amplitude characteristic – transition between the pass band and the barrier band – would not be sharp enough [3].

First, two medium-pass filters with a medium frequency of 50 Hz were designed and constructed. Figure 3 shows a schematic diagram of a square medium-pass filter with an inverting amplifier and a multiple feedback loop [6]. Figure 5 illustrates a normalized amplitude characteristic (curves 1 and 2). The values of the particular elements were calculated according to the guidelines given in Ref. [6].

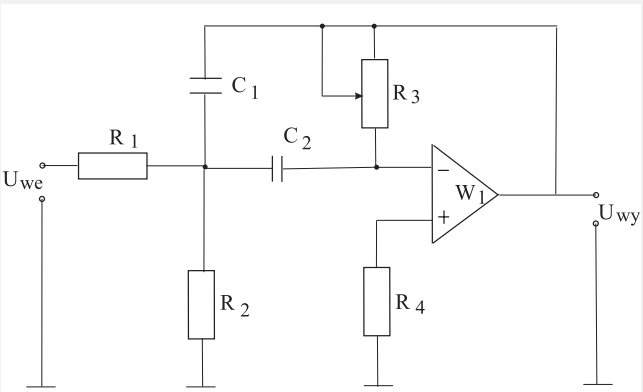

Fig. 3. Square medium-pass filter with a multiple feedback loop and an inverting amplifier [6]: $A_{uf} = 10$, $Q = 5$, $f_0 = 50$ Hz; $R_1 = 15.9$ kΩ, $R_2 = 3.54$ kΩ, $R_3 = 318.5$ kΩ, $R_4 = 320$ kΩ, $C_1 = C_2 = 100$ nF

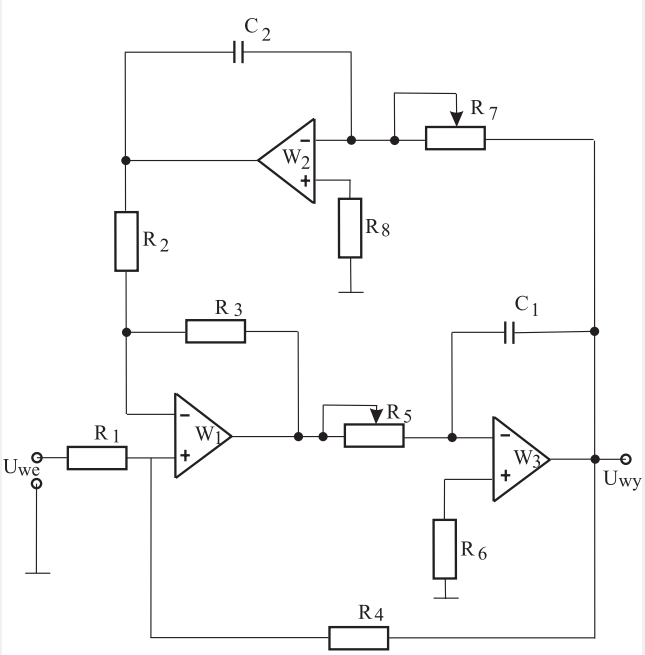

Fig. 4. Medium-pass filter used for modeling state variables [3]: $A_{uf} = 0$, $Q = 20$, $f_0 = 50$ Hz, $R_1 = 30$ kΩ, $R_2 = 900$ kΩ, $R_3 = 900$ kΩ, $R_4 = 300$ Ω, $R_5 = 318.5$ kΩ, $R_6 = 300$ kΩ, $R_7 = 318.5$ kΩ, $R_8 = 300$ kΩ, $C_1 = C_2 = 10$ F

Next, a two-pole filter for modeling state variables [3] was developed. Its schematic diagram is shown in the Figure 4, and its amplitude characteristic is included in the Figure 5 (curve 3). Although such filters incorporate numerous components, they are characterized by sharp amplitude characteristics (high Q-factor) [3].

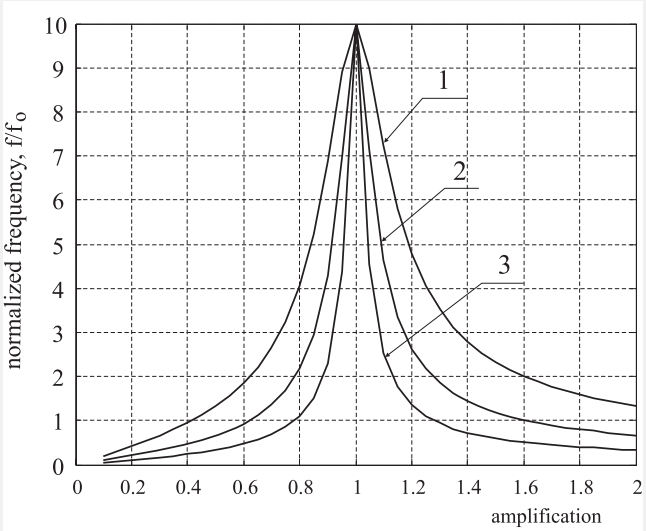

Fig. 5. Amplitude characteristics of the square filter and the filter for modeling state variables for various values of the Q-factor: 1 – $Q = 5$, 2 – $Q = 10$, 3 – $Q = 20$

When the filters were ready, they were used in a model measurement system shown in the block diagram in the Figure 6. Each signal leaving the sensor was amplified in the measurement amplifier and fed to the input of the band-pass filter. After filtration, the signal was amplified again in the final amplifier and then measured by means of the digital voltmeter.

After modification the measurement system was able to recognize signals emitted by high-voltage power lines (up to 110 kV) under stationary conditions from a distance of about 200 m. It was essential to study the system susceptibility to disturbance when in motion. Some improvement in the performance was reported, because it was possible to suppress part of the low frequency disturbances resulting from the system horizontal or vertical motions. The slow-varying disturbances resulting from accidental displacements of the system as well as the disturbances caused by electrostatic discharges were not reduced. From the amplitude characteristics in Figures 4 and 5, it was clear that the disturbance signals with a frequency of a dozen to several dozen hertz could be transmitted through the particular filters provided that their amplitudes were several times higher than the amplitude of the useful signal.

The filters under analysis were filters of the second order with two-pole transfer functions. An attempt was made to improve the amplitude characteristics – the slope of the transition between the barrier and the pass bands. Their cascade-coupling turned out to be ineffective; a steeper slope of the characteristics resulted in worse parameters of the impulse response and the phase characteristic [3].

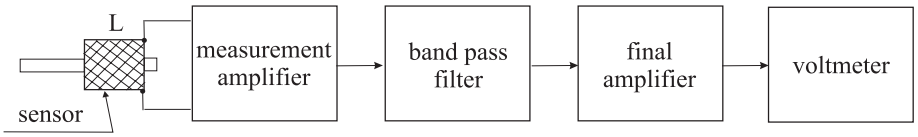

Fig. 6. Block diagram of the measurement system

During the tests it was established that the filter distortions were attributable to filter tuning, thus indirectly to changes in the mid-band frequency f_0, changes in the capacitor capacity and considerable fluctuations in ambient temperature. The main disadvantage of the square filters and the filters used for modeling state variables is that the values of the particular elements have to be selected very carefully, which is troublesome. It is easy, however, to select resistors so that their susceptibility to changes in ambient temperature is negligible and equal to 0.2%. Selecting capacitors with a proper capacity, i.e. not greater than 2%, is more difficult, because they have to meet the requirements included in the standards. The process of selection is very labor-consuming, and therefore useless if conducted under laboratory conditions. If the measuring system is to have, for instance, military applications, it is envisaged that the temperature changes will range 220–320 K. There is always a risk that the mid-band frequency f_0 will change. This may cause a significant reduction in the level of the useful signal, or even its loss in an extreme case, if the steepness of the filter characteristic is high and the pass band narrow.

The analysis showed that a new model of the active filter had to be constructed. Since the disturbance signals entering the filter caused its self-tuning under changeable climatic conditions, it was necessary to construct a band filter with a very steep amplitude characteristic, which would enable total or substantial attenuation of disturbance signals with frequencies of less than $0.5f_0$ and more than $1.5f_0$.

It was assumed that the most desirable feature of the filters used in the analyzed system was the sharpness of their characteristics. Chebyshev filters seemed to be the most suitable. An optimal six-pole high-pass Chebyshev filter with a waviness of 0.5 dB and a boundary frequency of 40 Hz was developed and constructed by coupling three two-pole filters to form a cascade. Furthermore, it was necessary to construct a low-pass filter with a boundary frequency of 70 Hz. The filter was designed effectively by applying a table for simplified design of VCVS (voltage-controlled voltage source) filters provided in Ref. [3]. It should be noted that the structure of VCVS filters is fairly universal. It is possible to change discrete elements easily. For instance, a Chybyshev filter can be replaced by a Bessel or Butterworth filter and vice versa. This information is important to designers conducting an initial study on functional blocks or even a whole device.

The initial amplifier was cascade-coupled to the high-pass and low-pass filters in order to modify the input system with a set of filters. The model system with a pass band in the range 40–70 Hz was tested first under laboratory and then under field conditions.

The field study showed that the performance of the modified model system was better, which suggests that the pass band assumed for this set of filters was too broad.

The test results were analyzed and the following conclusions were drawn. The attenuation of disturbance signals interfering with the system for detection and location of overhead transmission lines requires employing a band-pass filter with a narrow pass band (high Q factor) and very steep slopes of the amplitude characteristics in the transition region between the pass and the barrier bands. The filter is able to tune itself to a medium frequency due to a change in the value of discrete elements RC. A switched-capacitor filter whose medium frequency is retuned with a clock signal was selected. An example of such a filter is a Maxim MF10 integrated circuit consisting of two independent active CMOS filters. A clock signal and 3–4 resistors are required to construct a filter of the second order. A fourth-order filter can be constructed in one MF10 circuit by cascade-coupling of two filters of the second order. Filters of a higher order can be made by connecting several MF10 circuits. The system can combine the different functions of Bessel, Butterwoth, Cauer and Chebyshev filters (Fig. 7).

A Butterworth filter makes it possible to obtain a flat amplitude characteristic in the pass band and minimize amplitude distortions of the transmitted signal. On the other hand, the bend of the amplitude characteristic is less sharp in the transition region between the barrier and the pass bands.

A Bessel filter (also known as a Thompson filter) makes it possible to obtain the most linear phase characteristic in the pass band and therefore, minimize phase distortions. This leads to a considerable decrease in the steepness of the slope of the amplitude characteristic between the pass band and the barrier band.

A Chebyshev filter enables obtaining the steepest slope of the amplitude characteristic in the transition region between the pass and the barrier bands. The steepness causes fluctuations in the pass or barrier band [3].

An elliptic (Cauer) filter is similar in design to a Chebyshev filter. The fluctuations of the amplitude characteristic are in the pass and barrier bands. Cauer filters are characterized by a steep slope. A more critical selection of elements is required than in the case of the Chebyshev filters [5].

The MF10 system possesses separate outputs for the high-pass, band-pass and low-pass filters. As the medium frequency of a filter is dependent solely on the frequency of the clock signal generated by the quartz oscillator, the fear is that it may be retuned due to ambient temperature changes.

To guarantee a desirable response of the MF10 filter, it was essential to meet the condition that for medium frequencies lower than 5 kHz, the Q-factor of each filter section could not exceed 150. For higher values of medium frequencies f_0, the admissible value of the Q factor is smaller. For example, for $f_0 = 10$ kHz, the Q factor could not be more than 20 [4].

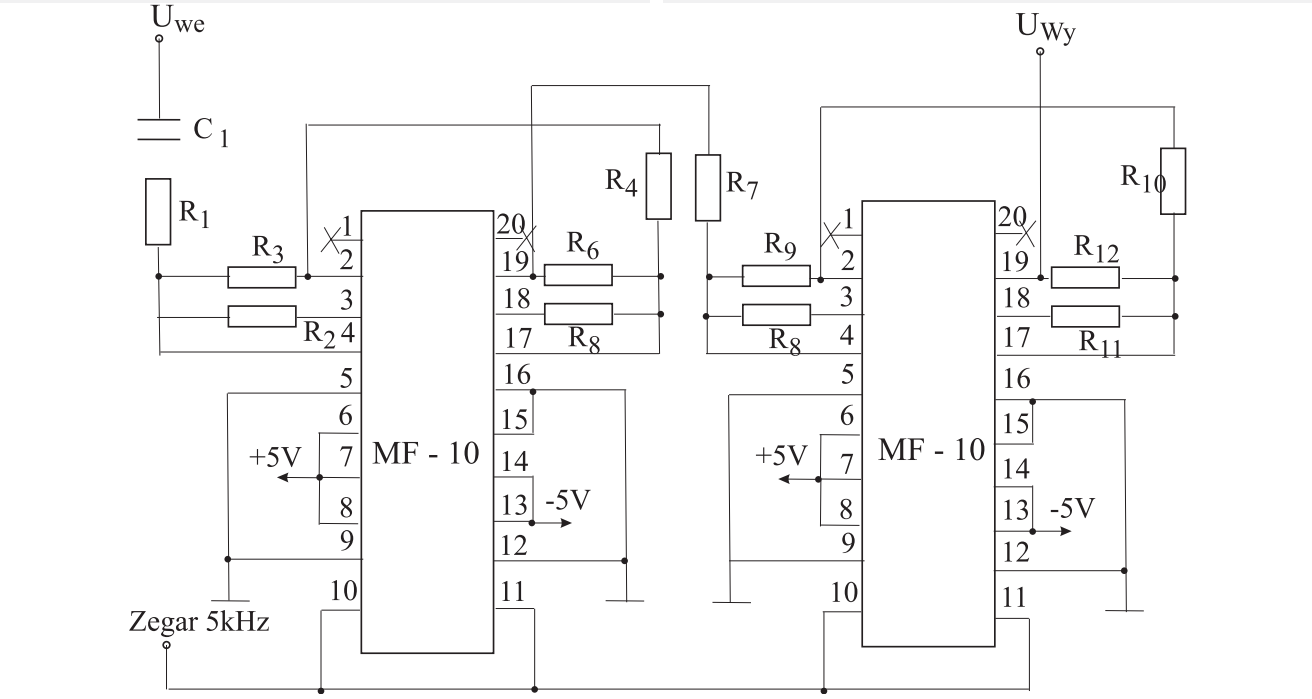

Fig. 7. Diagram of the band-pass filter of the 8th order composed of MF10 circuits. $R_1 = R_3 = 100$ kΩ, $R_2 = R_5 = R_8 = R_{11} = 10$ kΩ, $R_4 = R_6 = 160$ kΩ, $R_7 = R_9 = 200$ kΩ, $R_{10} = R_{12} = 230$ kΩ

Considering all the pros and cons of each filter type, the authors found it necessary to make a compromise between the processing accuracy in the time domain and the sharpness of the amplitude characteristic.

The Butterworth band-pass filter with the following parameters was selected:

- lower edge of the transmission band, $f_1 = 48$ Hz,
- upper edge of the transmission band, $f_2 = 52$ Hz
- maximum attenuation in the transmission band, $\alpha_p = 0.5$ dB,
- edge of the barrier band, $f_3 = 45$ Hz,
- edge of the barrier band, $f_4 = 55$ Hz,
- minimum attenuation in the barrier band, $s = 50$ dB.

Using the method of filter designing discussed in Ref. [5], it was possible to determine that $N = 6$. In practice, however, the filter had to be equipped with two MF10 circuits, and the final assumption was that $N = 8$. Subsequently, a rounded value of the filter quality factor was determined and it was equal to 10. All the design requirements provided by the manufacturers in catalogues had to be met before the values of the Q-factor in the particular filter sections could be calculated. They values were as follows: $Q_1 = 10$, $Q_2 = 15.5$, $Q_3 = 19.6$, $Q_4 = 23$.

Figure 7 shows a diagram of the band-pass Butterworth filter of the 8th order, while Figure 8 presents the filter amplitude characteristics for different values of the quality factor Q.

Finally, the filter was constructed and used in the measurement system according to the block diagram shown in the Figure 7. The tests were conducted under laboratory and field conditions. A significant improvement in the performance of the system was reported. It was possible to detect a high-voltage line (up to 110 kV) from a short distance of 800 m. The system showed considerable resistance to slow-varying disturbances produced during a high-speed flight. It seems that a further improvement in the filter properties is possible if the quality factor and the filter order are increased.

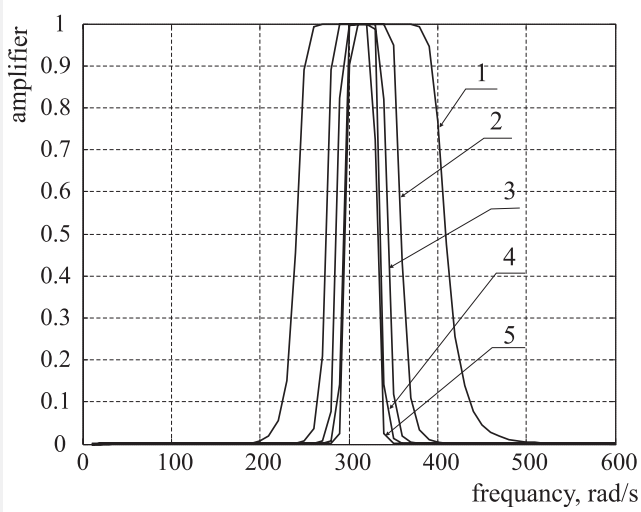

Fig. 8. Amplitude characteristics of the Butterworth filter of the 8th order for the following values of the Q-factor: 1 – $Q = 2$, 2 – $Q = 4$, 3 – $Q = 6$, 4 – $Q = 8$, 5 – $Q = 10$

4. CONCLUSIONS

Slow-varying disturbances with frequencies close to the frequency of the useful signal (50 Hz) and amplitudes of up to several hundred times bigger than the amplitude of the useful signal are reported to have a negative influence on the operation of systems used for detecting and locating high-

-voltage power lines from a distance of an order of several hundred meters.

Disturbance signals induced in the sensor (antenna) are attributable to the sensor intersecting of the Earth's magnetic field lines; they are also due to electrostatic discharges produced by the flow of air around the system casing or by accidental rubbing of the casing with a charged fabric, i.e. a laboratory worker clothing.

Isolating the useful signal requires applying high-order high Q-active filters. It is advisable to use switched-capacitor active filters with a quartz oscillator assuring medium frequency stability.

Decreasing the bandwidth of the pass filter will substantially reduce the disturbance signals and enable accurate detection and location of high-voltage power lines from a distance of more than 1000 m. The systems can be used in missiles with automatic self-guidance.

Acknowledgement

The problems discussed in this paper were investigated as part of a research project financed by the Polish government in the years 2005–2007.

References

[1] Van Valkenburg M.E.: *Analog Filter Design*. Chap. 5. New York, Holt, Rinehart and Winston, 1982.

[2] Grisé W.R.: *Applications of Switched-Capacitor Circuits in Active Filters and Instrumentation Amplifiers*. Fall vol. 3 No. 3, 1999, ISSN 1523-9926

[3] Horowitz P., Hill W.: *Sztuka elektroniki*. (The Art of Electronics). WKŁ 1996

[4] Regean T.: *Introducing the MF-10*: *A Versatile Monolithic Active Filter Building Block.* National Semiconductor Application Note, 307, August 1982.

[5] Izydorczyk J., Konopacki J.: *Filtry analogowe i cyfrowe*. (Analog and Digital Filters). Katowice, Wydawnictwo Pracowni Komputerowej Jacka Skalmierskiego 2003

[6] Kulka Z., Nadachowski M.: *Zastosowania wzmacniaczy operacyjnych*. (Applications of Operational Amplifiers), Warszawa, WNT 1986

[7] *Linie i stacje elektroenergetyczne w środowisku człowieka*. (Power Lines and Stations in the Human Environment). Folder, wydanie http://www.pse.pl/03/publikacje /200506_ folder04.pdf

[8] Szmitkowski J., Tuśnio J. i in.: *Metoda i urządzenie do monitorowania zagrożeń porażenia prądem elektrycznym w warunkach prowadzenia akcji ratowniczych*. (Monitoring Method and Equipment to Prevent Electric Shocks during Salvage Operations). Sprawozdanie z realizacji projektu badawczego, Warszawa, Szkoła Główna Służby Pożarniczej 2003

[9] Tuśnio J., Koruba Z.: *Koncepcja określenia położenia kątowego źródła promieniowania elektromagnetycznego małej częstotliwości na przykładzie napowietrznych urządzeń elektroenergetycznych*. (A Concept for Determining the Angular Position of Overhead Power Lines as Sources of Low-Frequency Electromagnetic Radiation). VI Międzynarodowa Konferencja Uzbrojenia, Waplewo 2006

[10] Tuśnio J.: *Wykrywanie i lokalizacja napowietrznych urządzeń elektroenergetycznych w aspekcie konstrukcji i eksploatacji aparatów latających* (Detecting and Locating Overhead Power Lines in the Aspect of Design and Use of Aerial Vehicles). Mat. Konf. II Międzynarodowej Konferencji „Naukowe Aspekty Bezpilotowych Aparatów Latających", Kielce – Cedzyna 10–12 maja 2006

[11] Wiliams J.: *Applications for a Switched-Capacitor Instrumentation Building Block*. Linear Technology Application Note, 3, July 1985