http://dx.doi.org/10.7494/miag.2017.3.531.21

JÓZEF SUCHOŃ
STANISŁAW TYTKO
PAWEŁ MENDYKA

Armored face conveyor's smooth velocity control for increased durability

The article presents the concept and assumptions concerning the smooth velocity control of an armored face conveyor, and also (on this basis) the subsequent transport conveyors used in an underground coal mine. The most-important significant mathematical equations are presented, allowing us to adjust scraper movement speed to maintain a constant cross section of the transported material stream, both in the case of unidirectional and bidirectional mining. Particular attention has been paid to the zones where a longwall shearer works with a variable web; that is, when a shearer is entering into a new coal seam layer at the ends of the excavation.

Key words: *scraper conveyor, armored face conveyor, velocity control, longwall, conveyor durability*

1. INTRODUCTION

All of the scraper conveyors currently working in underground coal mine longwall systems are operating in practice with the constant movement velocity of a scraper chain (with the exception of to the use of two-speed drives for easier start-up). The variability of the longwall working conditions, technology of the mining operations, and cooperation between the machines and equipment of the longwall, maingate, and subsequent transport devices make the work of armored face conveyors (AFC), beam stage loaders (BSL), and belt conveyors characterized by high variability of efficiency; thus, the constant speed of the work of the AFC becomes unfavorable due to:

- the significant shortening of the conveyor's life, calculated in the amount of transported material from the moment of commencement of the conveyor's work to the replacement of its individual components and assemblies,
- the increased electricity consumption,
- the increased heat and noise emissions to the mine atmosphere.

The solution of this inconvenience is to change the nature of the work of the AFC from a fixed velocity to a variable one. To archive this, it is necessary to implement in new control system frequency inverters that, by using the appropriately selected control signals and algorithms, will provide such an automatic control of the conveyor chain speed to ensure a constant most-favorable cross section of coal output on the conveyor.

The use of a frequency inverter also gives the additional advantage of the soft starting and braking of the scraper conveyor. Currently, the two-speed electric motor connected to the flexible coupling is the most-commonly-used solution for facilitating the start-up of the conveyor. There are also other technical solutions to this problem, such as fluid couplings, thyristor starters, and CST drives. More information about this topic is presented in [1].

2. APPLICATION CONDITIONS AND STRUCTURE OF CONTROL SYSTEM

Analysis of longwall shearer work has shown that, in the case of mining with a constant web, the appliction

requirement for conveyor chain velocity control is the access to two external control signals; i.e., the velocity of the shearer's movement during the excavation and cleaning of the track (in the case of unidirectional mining) as well as information about the direction of the shearer's motion (movement direction consistent with or opposite to the movement of the conveyor chain).

Since the longwall shearer changes its web in the function of shearer distance to the end of the longwall during its entrance into a new coal seam layer, a third necessary control signal is the position of the shearer in the longwall for stabilizing the excavated material stream cross-section in this phase. Because of this, it is essential to obtain either the information of the present position from the shearer's internal recorders or to install external sensors and devices for measuring such a position for the proper operation of a conveyor speed control system. The concept of measuring the displacement of the shearer as it relates to the base point on the basis of the pulses from the drive system is presented in a later part of this paper.

In order to control the speed of the chain of an armored face conveyor during mining with a constant web, the use of special control algorithms is necessary that, in this case, are the dependencies determining the velocity of the chain as a function of the following parameters:

- the velocity of the longwall shearer during mining and cleaning of the path (for unidirectional mining),
- the direction of the shaper's movement relative to the transport direction of the conveyor,
- an effective shearer web,
- effective mining height,
- carbon looseness factor,
- the most-favorable cross section of the excavated material on the conveyor,
- the coefficient determining the relative value (part) of the material loaded on the longwall conveyor by the milling head during unidirectional mining.

Figure 1 shows an exemplary control system of an armored face conveyor that is suitable for use under industrial conditions. A detailed description of this system (along with details of the control software structure) is provided in [2]. The control system assembly of conveyor velocity is based on the main controller (A1), local controller (A2), frequency inverters (separately for the maingate [U1] and tailgate drives [U2]), control panel (A4), electric drives (M1–M3), and auxiliary communication and emergency brake systems. Considering the cooperation of the conveyor with other longwall equipment and subsequent transport devices, the system should also be equipped with a communication interface to connect with the beam stage loader and belt conveyor controllers as well as with the supervisory control system.

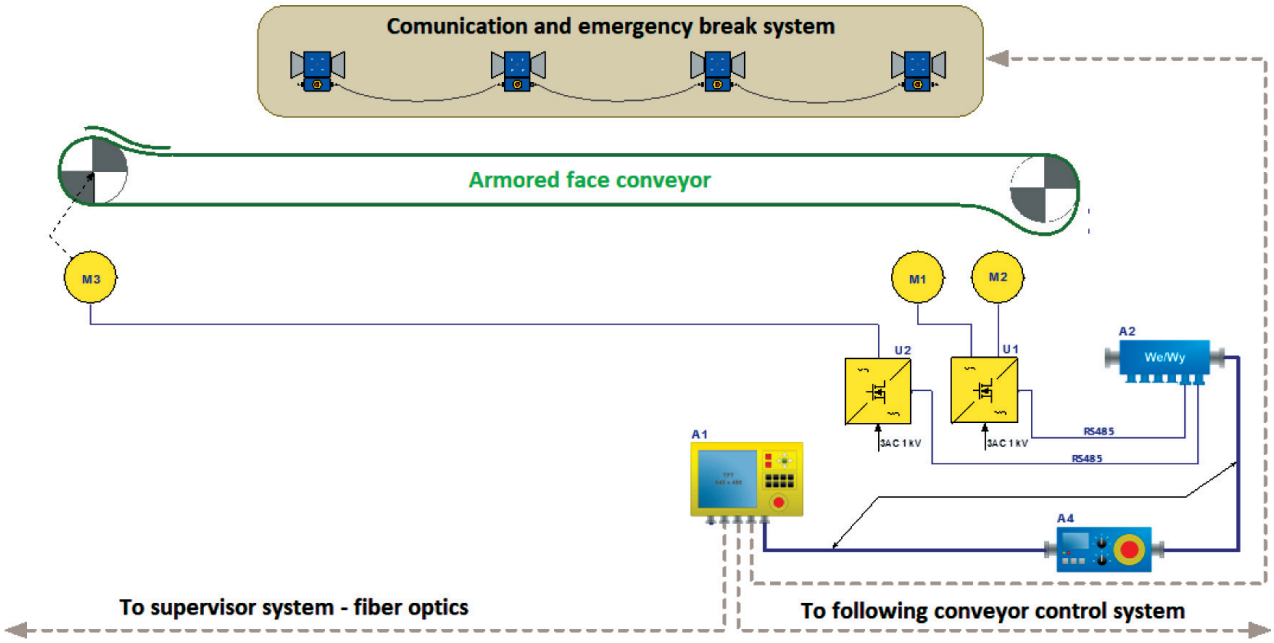

Fig. 1. Diagram of speed control system of AFC: M1, M2 – maingate motors; M3 – tailgate motor; A1 – master controller; A2 – local control; A4 – control panel; U1, U2 – frequency inverters

3. MONITORING OF SHEARER POSITION IN LONGWALL EXCAVATION

Continuous information about the harvester position is required for the scraper conveyor controller for the following reasons:

- to determine the speed of the conveyor movement as a function of the haulage rate and the size of the shearer web during its entrance into a coal seam,
- it is helpful to properly control the work of the shearer to overcome the difficulties and hazards occurring in the various parts of the face,
- it can contribute to the full automation of the entire longwall complex and improvement of work safety.

Positioning of the harvester in the longwall must be accurate (without systematic error), which could increase with each harvester passing along the excavation. For this reason, the gear ratio of the shearer haulage system needed to determine the displacement from the adopted coordinate system should be reported as a theoretical relationship, taking into account the number of teeth of all gears in the gearbox and not (as commonly used) as an approximation of the gear ratio (with a gear ratio error of 0.1%, one passing through the face of a 300 m length gives an error in the shearer position of up to 0.3 m).

Displacement of the shearer from the starting position is best determined by the number of turns of the high-speed gear of the drive system. The direction of the shearer is determined by the following relationship:

$$L_i = \frac{n_i}{i_c} \cdot z_k \cdot p \ \text{[m]} \tag{1}$$

where:

- L_i – distance of the drive gear wheel from the beginning of the measuring reference [m],
- n_i – the number of turns of the high-speed shaft on the path of the shearer,
- z_k – number of teeth of the sharer drive wheel,
- p – pitch of the sharer haulage system (ladder mechanism) [m],
- i_c – overall gear ratio of the shearer drive system.

If the beginning of the measurement reference on the conveyor is adopted at the location of the shearer drive wheel axis on the maingate side, when the cutting drum finishes the cutting the upper layer of the coal seam (point K), i.e. $L_i = 0 = L_0$ (Fig. 2), then the shearer movement should be terminated when the K' point is reached; i.e., when the shearer travels the following distance:

$$L_k = L_{SO} - A_{mr} - 2L_{rg} \ \text{[m]} \tag{2}$$

The position of point $L_{i=0}$ at the initial stage of the sharer work (first cutting) will be at a distance from point K equal to $L_0 = L_{rg} + W$.

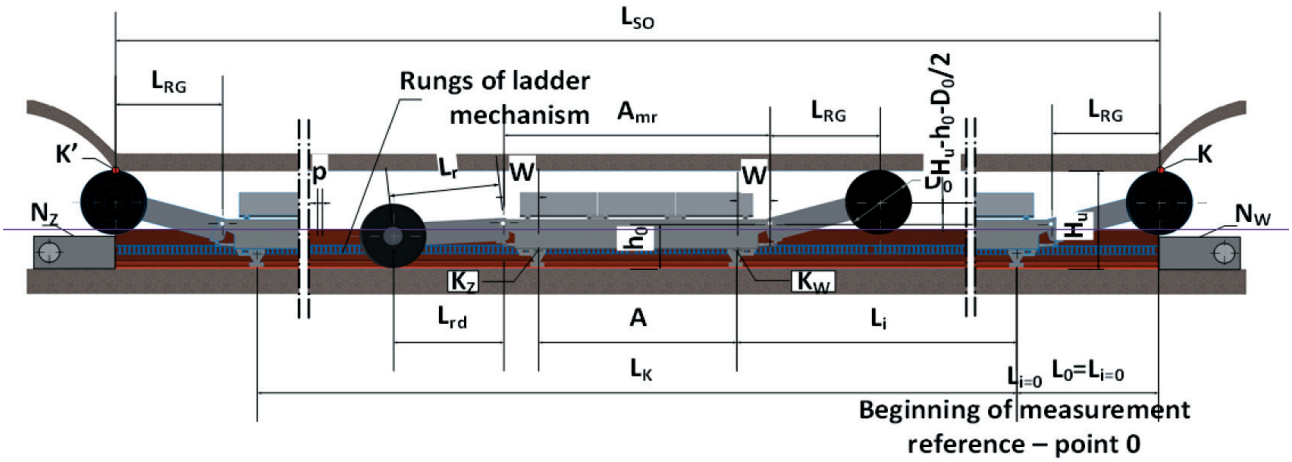

Fig. 2. Scheme for determining position of shearer when moving in line with and opposite to direction of movement of AFC: Nw – maingate drive, Nz – tailgate drive, Kw, Kz – drive wheels on the shearer's maingate and tailgate sides

For different reasons, the position of the K points relative to the previously adopted point $L_{i=0}$ may change; then, $L_0 - L_{rg} + W$. Such situations may occur near the maingate, tailgate, or even on both sides when the normal or shortened pans are inserted or removed. Then, dependence (2) will then take the following form:

$$L_k = L_{SO} - A_{mr} - 2L_{rg} \pm L_{dw} \pm L_{dz} \quad \text{[m]} \tag{3}$$

where:

- L_k – distance that shearer travels passing the longwall [m],
- L_{so} – initial length of the longwall [m],
- A_{mr} – spacing between shearer arm attachment axes [m],
- L_{rg} – length of the shearer arm projection on horizontal axis [m],
- L_{dw}, L_{dz} – lengths added or subtracted due to the addition or subtraction of pans near the maingate and tailgate drives [m].

The length of the arm in the projection (or L_{rg}) determines the following relationship:

$$L_{rg} = \sqrt{L_r^2 - (H_k - H_0 - 0.5D_o)^2} \quad \text{[m]} \tag{4}$$

where:

- H_k – maximum cutting height [m],
- H_o – the height of the shear arm from the longwall floor [m],
- D_o – the diameter of the mining drum [m].

The position of the shearer in the wall from starting point $L_{i=0}$ can be accurately determined by the number of pitches of the shearer haulage system (ladder mechanism) that it has passed:

$$N_i = \frac{L_i}{p} = \frac{n_i \cdot z_k}{i_c} \tag{5}$$

Miners often determine shearer position in the face approximately by specifying the number of the section of the longwall powered roof support counted from the maingate drive. In order to use this measure, the following formula can be used (Fig. 3):

$$S_i = \frac{N_i - N_z}{N_r} + S_z \tag{6}$$

where:

- S_i – section number indicating the approximate location of the shearer,
- N_i – the number of pitches of the shearer haulage system from point $L_{i=0}$,
- N_z – the number of pitches of the shearer haulage system from point $L_{i=0}$ to the beginning of the AFC section,
- N_r – the number of pitches of the shearer haulage system on one normal AFC section,
- S_z – number of sections of powered support at the maingate drive with a pitch different from the AFC sections.

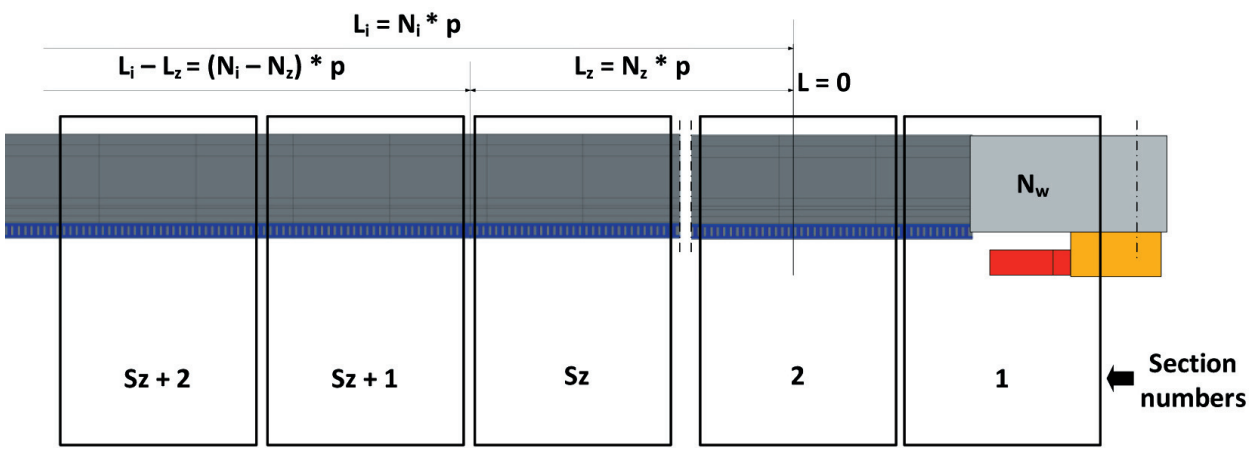

Fig. 3. Determination of approximate position of sharer in longwall by providing number of powered support sections on basis of counted pulses Ni

4. DEPENDENCIES ESSENTIAL TO CONTROLLING VELOCITY OF CONVEYOR MOVEMENT DURING OPERATION OF SHARER WITH CONSTANT WEB

The volume of the mined coal seam and the volume (performance) of the output is described by dependence [3]:

$$Q = H_u \cdot Z \cdot v_k \ \ [\mathrm{m^3/s}] \tag{7}$$

$$Q_u = Q \cdot \Psi = H_u \cdot Z \cdot v_k \cdot \Psi \ \ [\mathrm{m^3/s}] \tag{8}$$

where:

- Q, Q_u – volume of the mined coal seam and volume of the coal output [m^3/s],
- H_u – mining height [m],
- Z – sharer web [m],
- v_k – shearer movement velocity [m/s],
- Ψ – relaxation coefficient (Ψ = 1.35–1.4).

The velocity of the conveyor chain relative to the sharer is determined by the following dependence:

$$v_{ts/k} = v_{ts} \pm v_k \ \ [\mathrm{m/s}] \tag{9}$$

where:

- $v_{ts/k}$ – velocity of the conveyor chain relative to the sharer [m/s],
- v_k – shearer movement velocity [m/s],
- v_{ts} – conveyor chain velocity [m/s].

In formula (9), the "+" sign should be used when the shearer and chain velocity vectors have opposite directions (when the sharer moves in the direction of the tailgate), and the "–" sign when these vectors are consistently oriented in the direction of the maingate.

During bidirectional mining, it is possible to assume that the entire output is taken over by the conveyor; then, its Q_s efficiency is equal to the following:

$$Q_s = Q_u = H_u \cdot Z \cdot v_k \ \ [\mathrm{m^3/s}] \tag{10}$$

By substituting the actual cross-section of the coal output on the conveyor F_s with the equivalent rectangular cross-section (Fig. 4), the following relationship is obtained:

$$F_s = b_s \cdot h \ \ [\mathrm{m^2}] \tag{11}$$

This cross-section (as a nominal F_{sn}) should be determined according to the following relationship:

$$F_{sn} = b_s \cdot h_n = \varphi_s \cdot b_s^2 \ \ [\mathrm{m^2}] \tag{12}$$

where φ_s = (0.4–0.6).

Because:

$$Q_u = Q_s = F_{sn} \cdot v_{ts/k} \tag{13}$$

Hence, using dependencies (8), (9) and (12), the following formula is obtained:

$$Q_s = Q_u = H_u \cdot Z \cdot v_k \cdot \Psi = \varphi_s \cdot b_s^2 \cdot v_{ts/k} \ \ [\mathrm{m^3/s}] \tag{14}$$

from which the following is obtained:

$$v_{ts} = \frac{H_u \cdot Z \cdot v_k \cdot \Psi}{\varphi_s \cdot b_s^2} - (\pm v_k) = \\ = v_k \cdot \left[\frac{H_u \cdot Z \cdot \Psi}{\varphi_s \cdot b_s^2} - (\pm 1) \right] \ [\mathrm{m/s}] \tag{15}$$

Formula (15) for the opposite movement direction of the sharer (i.e., in the direction of the conveyor's return drive) will be as follows:

$$v_{ts} = v_k \cdot \left[\frac{H_u \cdot Z \cdot \Psi}{\varphi_s \cdot b_s^2} - 1 \right] = k_{zp} \cdot v_k \ \ [\mathrm{m/s}] \tag{16}$$

and for the consistent movement (i.e., in the direction of the maingate):

$$v_{ts} = v_k \cdot \left[\frac{H_u \cdot Z \cdot \Psi}{\varphi_s \cdot b_s^2} + 1 \right] = k_{zz} \cdot v_k \ \ [\mathrm{m/s}] \tag{17}$$

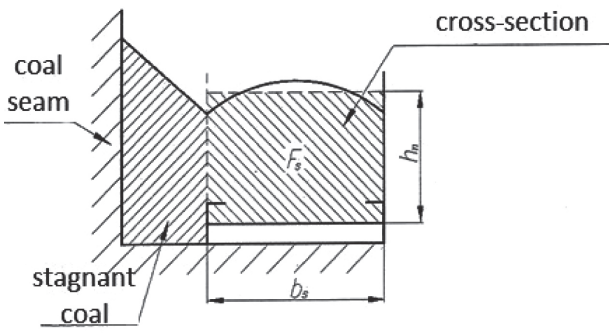

Fig. 4. Real and substitutive output cross-section on conveyor base plate

When the shearer is mining unidirectionally, the part of the excavated material remains at the ramp plate of the conveyor. Then, the efficiency of the coal loaded by the shearer on the conveyor Q_{sj} determines the following formula:

$$Q_{sj} = Q_u \cdot k_u = k_u \cdot H_u \cdot Z \cdot \Psi \quad [\mathrm{m^3/s}] \tag{18}$$

and the efficiency of loading coal from the ramp late to the conveyor Q_r will equal:

$$Q_r = Q_u (1 - k_u) \quad [\mathrm{m^3/s}] \tag{19}$$

where k_u in formulas (18) and (19) is the coefficient determining the relative value (share) of the coal loaded on the conveyor during the mining.

In the same way as for bidirectional machining, the appropriate dependencies can be derived to control the movement velocity of the conveyor.

When the shearer cuts the coal in a direction consistent to the conveyor's chain movement (in the direction of the maingate), the following relationship is obtained:

$$v_{ls} = v_k \cdot \left[\frac{k_u \cdot H_u \cdot Z \cdot \Psi}{\varphi_s \cdot b_s^2} + 1 \right] = k_{1z} \cdot v_k \quad [\mathrm{m/s}] \tag{20}$$

and while working in the opposite direction:

$$v_{ls} = v_k \cdot \left[\frac{k_u \cdot H_u \cdot Z \cdot \Psi}{\varphi_s \cdot b_s^2} - 1 \right] = k_{1p} \cdot v_k \quad [\mathrm{m/s}] \tag{21}$$

During the return of the shearer, the excavated material is loaded from the ramp plate. The dependencies on the v_{ls} are as follows:

– for consistent movement:

$$v_{ls} = v_k \cdot \left[\frac{(1 - k_u) \cdot H_u \cdot Z \cdot \Psi}{\varphi_s \cdot b_s^2} + 1 \right] = k_{1zp} \cdot v_k \quad [\mathrm{m/s}] \tag{22}$$

– for opposite movement:

$$v_{ls} = v_k \cdot \left[\frac{(1 - k_u) \cdot H_u \cdot Z \cdot \Psi}{\varphi_s \cdot b_s^2} - 1 \right] = k_{1po} \cdot v_k \quad [\mathrm{m/s}] \tag{23}$$

5. DEPENDENCIES ESSENTIAL TO CONTROLLING VELOCITY OF CONVEYOR MOVEMENT DURING MINING OF LEFTOVER COAL LAYER

According to Figure 5, the thickness of the leftover layer equals $H = H_u - D_o = k_{su} \cdot H_u$. In the same manner as in point 3, the dependence on the v_{ls} in the case of the leftover layer cutting by the maingate is obtained as [2]:

$$v_{ls} = v_k \cdot \left[\frac{k_{su} \cdot H_u \cdot Z \cdot \Psi}{\varphi_s \cdot b_s^2} - 1 \right] = k'_{2p} \cdot v_k \quad [\mathrm{m/s}] \tag{24}$$

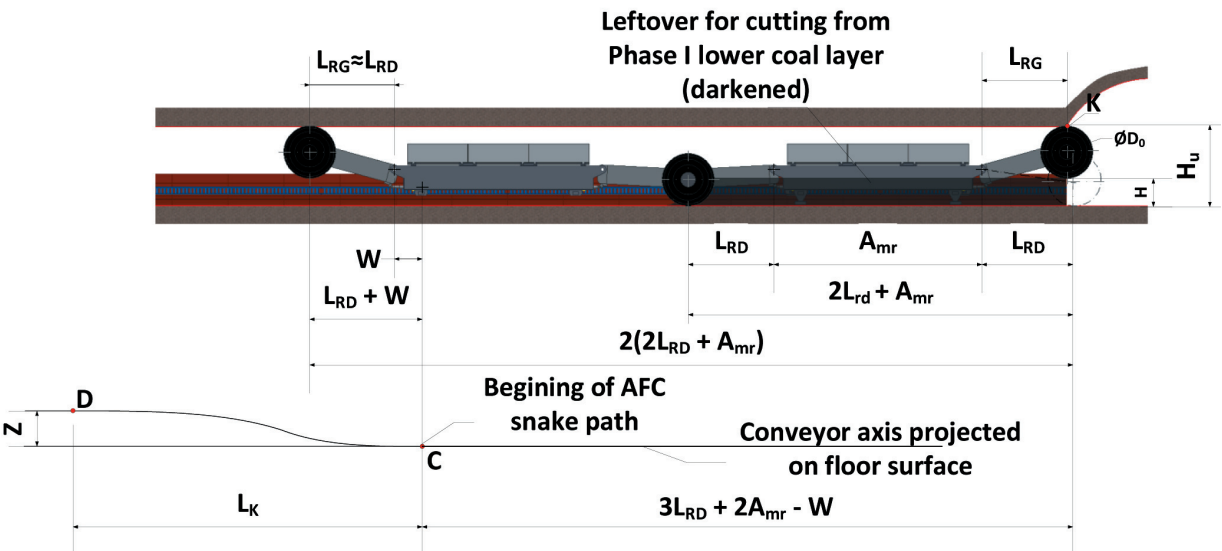

Fig. 5. Shearer path during cutting of leftover coal layer and position of upper cutting drum at moment of shearer entrance to snake part of AFC

and the same way at the leftover cutting by the tailgate:

$$v_{ls} = v_k \cdot \left[\frac{k_{su} \cdot H_u \cdot Z \cdot \Psi}{\varphi_s \cdot b_s^2} + 1 \right] = k'_{2z} \cdot v_k \ \text{[m/s]} \quad (25)$$

where $k_{su} = H/H_u$ is the relative thickness of the leftover lower coal layer.

6. DEPENDENCIES ESSENTIAL TO CONTROL VELOCITY OF CONVEYOR MOVEMENT DURING MINING WITH VARIABLE WEB

Shearer passing through a snake part of the conveyor (which implies a variable cutting web) can be divided into three simplified phases. For example, when the harvester is driven in the area close to the maingate in Phase 1 (i.e., when drive wheel K_z passes from point C to C_1', at which wheel K_z moves in the direction of the coal seam by about 0.25 Z), the shearer will move by 0.35 L_k (Fig. 6). During this movement, the shearer velocity can be the same as during the cutting of the leftover layer.

In phase 2 (which is on the path from point C_1' to C_2), the velocity of the shearer changes linearly depending on the position of the shearer on the curvature. At point C_2 (after passing a distance of 0.48 L_k), the shearer will gain velocity corresponding to the full web. For this phase, after transforming dependence (1) and using the fact that the variable velocity of the shearer occurs at 0.48 L_k, the following formula is obtained:

$$v_{ls} = v_{lC_1'} + \frac{\Delta v_{ls}}{n_{C'-C_2}} \left(n_1 - n_{C'} \right) \ \text{[m/s]} \quad (26)$$

Considering that:

$$\Delta v_{ls} = \left(k'_{zp} - k_{zp} \right) \cdot v_k \ \text{[m/s]} \quad (27)$$

and:

$$n_{C_1'-C_2} = \frac{i_C \cdot 0{,}48 L_k}{z_k \cdot p} \quad (28)$$

and by substituting form (29), equation (30) is obtained:

$$k_j = \frac{\left(k'_{zp} - k'_{2p} \right)}{\dfrac{i_C \cdot 0{,}48 L_k}{z_k \cdot p}} \quad (29)$$

$$v_{ls} = \left(k'_{zp} + k_j \right) \cdot \left(n_i - n_{C_1} \right) \ \text{[m/s]} \quad (30)$$

In phase 3, from points C_2 to D; i.e., at a distance of $0.17L_k$ and later at a distance of $(l_{rd} + A + W)$, the v_{lk} should be like during mining with a constant web (i.e., $v_{lk} = k_{2p} \cdot v_k$). The movement of the shearer at distance $(l_{rd} + Aa + W)$ is necessary so that the K_w wheel reaches the end of the snake section and reaches point D (Fig. 6). During the shearer movement through the snake section, the conveyor on the side of the tailgate drive should be progressively pushed to

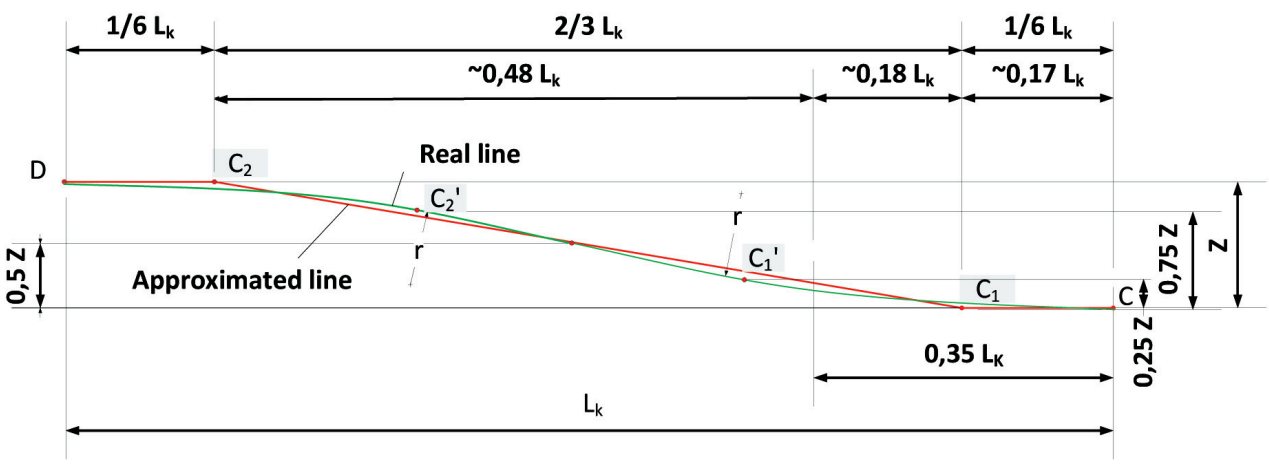

Fig. 6. Replacement of real curvature line of conveyor on snake section with straight line C_1–C–$_1$–C_2

the front of the face so that, when point D is reached, the entire length of the conveyor curvature is already straight.

7. CONTROL OF FOLLOWING CONVEYORS IN COAL OUTPUT TRANSPORT CHAIN

On the basis of the velocity control of the armored face conveyor, it is very easy to initiate the velocity control beam stage loader (BSL) and further elements of the coal output transport chain. In the case of the beam stage loader (Fig. 7) [4], the control signal for its chain velocity will be the movement rate of the longwall AFC.

The relationship between the velocity of movement of the AFC and the beam stage loader is linear and proportional according to the following formula:

$$v_{lp} = k_p \cdot v_{ls} \quad \text{[m/s]} \tag{31}$$

where:

v_{lp} – velocity of beam stage loader chain [m/s],
v_{ls} – velocity of armored face conveyor [m/s],
k_p – beam stage loader velocity rate in relationship to the AFC.

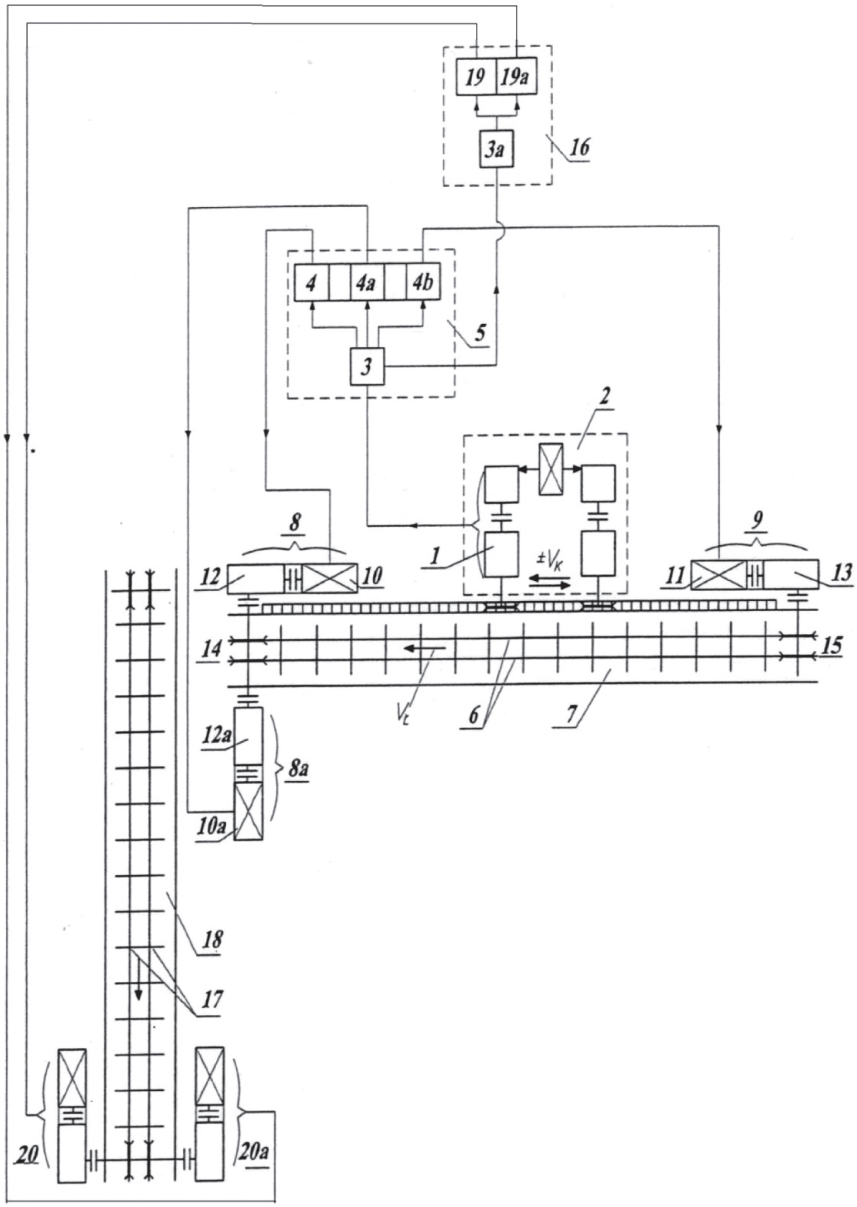

Fig. 7. Schematic of BSL velocity control system: 1 – transmission of shearer haulage system; 2 – sharer haulage unit; 3 – AFC velocity controller; 3a – BSL velocity controller; 4, 4a, 4b – frequency inverters; 6 – AFC scraper chain; 7 – AFC; 8, 8a, 9 – drive units; 10, 10a, 11 – drive motors; 12, 12a, 13 – gear units; 14, 15 – star pulleys; 16 – BSL control unit; 17 – BSL scraper chain; 18 – BSL; 19, 19a – BSL frequency inverters; 20, 20a – BSL drive units

Coefficient k_p is determined by equation (32):

$$k_p = \frac{\varphi_s \cdot b_s^2}{\varphi_p \cdot b_p^2} \tag{32}$$

where:

- b_s – the width of the AFC base plate [m],
- b_p – the width of the BSL base plate [m],
- φ_s – the relative height of the equivalent rectangular output stream on the AFC (φ_s = 0.4–0.6),
- φ_p – the relative height of the equivalent rectangular output stream on the BSL (φ_s = 0.3–0.5).

Coefficients φ_s and φ_p are determined by the following equations:

$$\varphi_s = \frac{h_{ns}}{b_s} \tag{33}$$

$$\varphi_p = \frac{h_{np}}{b_p} \tag{34}$$

In formulas (33) and (34), the constants are denoted by the following:

- h_{ns} – the nominal height of the equivalent rectangular output of the AFC [m],
- h_{np} – the nominal height of the equivalent rectangular output of the BSL [m].

The motion velocity of the belt conveyor receiving a coal output stream from the BSL should be based on the BSL scraper movement rate (Fig. 8), which depends on the movement speed of the AFC scraper chain. Direct use of the signal from the shearer is not advisable to control the velocity of the belt conveyor (just like in the case of the BSL velocity control) because it would require us to synthesize new complex control algorithms that incorporate both consistent and opposite mining directions during bi- and uni--directional cutting.

Using the signal from the BSL is much simpler because the belt speed is determined by the simple equation (35) in this case:

$$v_t = \frac{\varphi_p \cdot b_p^2}{k_a \cdot F_n} \cdot v_{lp} = k_t \cdot v_{lp} \ \text{[m/s]} \tag{35}$$

where:

- v_t – belt conveyor velocity [m/s],
- F_n – nominal cross-section of the output on belt conveyor [m],
- b_p – BSL base plate width [m],
- v_{lp} – BSL velocity [m/s],
- φ_p – the relative height of the equivalent rectangular output stream on the BSL,
- k_a – the conveyor belt velocity coefficient relative to the BSL.

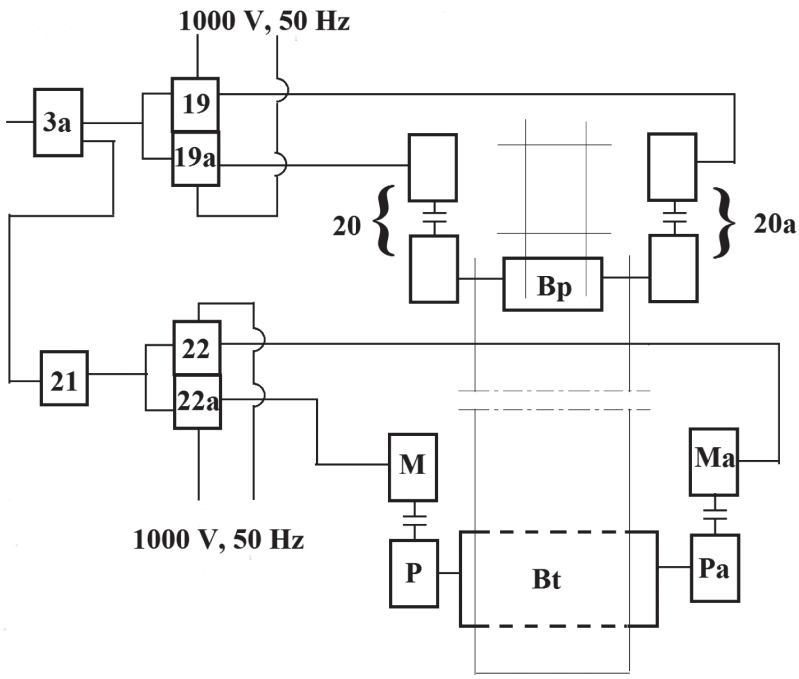

Fig. 8. Schematic of belt conveyor velocity control (in reference to scheme from Fig. 7): 3a – BSL controller; 19, 19a – BSL frequency inverters; 20, 20a – BSL drive units; 21 – belt conveyor controller (local); 22, 22a – belt conveyor frequency inverters; M, Ma – belt conveyor motors; P, Pa – belt conveyor gear units; Bp, Bt – BSL star pulley and belt conveyor drive drum

The presented method of belt conveyor velocity control can be further extended to control all of the following belt conveyors in the transport chain. This way of velocity control can also be applied to control the main (collective) conveyors; however, with the current model of underground coal exploitation in Poland (implying the simultaneous operation of a maximum of three longwalls from different regions and underground levels of mining), the consideration of such control of the conveyor belt operation is aimless.

8. FINAL REMARKS AND SUMMARY

The dependences and formulas shown in this article allow for such a velocity control of the armored scraper conveyor that, during its operation, the cross-sectional area of the excavated material at the conveyor pans is approximately constant. Its optimum value for each face excavation should be optimally determined with regards to the exploitation conditions, including the clearance under the shearer, size of the output material, width of the conveyor, adopted mining system (uni- or bi-directional), and mining and geological conditions. Relative, substitutive output height h as related to base plate width h/bs should not exceed 0.6, because the motion resistance then increases too greatly; moreover, the average movement rate of the dragged coal significantly decreases with respect to the scraper chain velocity, which makes transport less energy-efficient and less effective.

The conveyor speed control algorithm can be implemented in different ways. It can be a single computer program covering all stages of the sharer work in uni- and bi-directional systems or separate ones for both of these cutting methods. It is also desirable for the shearer operator to be able to manually control both the shearer and the AFC in case of automatic velocity control system failure.

An important issue that needs to be taken into account during the creation of conveyor speed control programs is the AFC velocity when the shearer is stopped and the coal output system is still working. On the basis of the equations previously presented, it would have been necessary to stop the AFC; such a sudden stop does not appear to be advantageous due to reduced miner safety and the delay created. Such frequent stops reduce the effective working time of the longwall and decrease productivity. For this reason, it seems desirable that the conveyor not stop completely but rather work continuously at approximately 10% of the nominal speed. The time interval of this movement could also vary according to local conditions.

Implementation of the presented velocity control system of an AFC enables the easy control of the movement speed of further conveyors in the transport chain. However, this requires the use of variable velocity drives in each transport device in such a chain.

Preliminary analyses based on practical observations tend to suggest that the introduction of the proposed control system can increase the durability of the conveyor components (measured by the amount of transported coal until end of each component's technical life) to about 25%. It is also expected to reduce transport energy consumption at a similar level.

Acknowledgement

Publication developed within INNOTECH-K1/IN1/158914/NCBR/12 research project „Energy-saving conveyor velocity control system to increase their durability," founded by the Polish National Center for Research and Development NCBiR.

References

[1] Mendyka P.: *Układy rozruchowe ścianowych przenośników zgrzebłowych*, "Napędy i Sterowanie" 2014, 16, 7/8: 138–144.
[2] Gospodarczyk P., Stopka G., Mendyka P.: *Projekt i badania ścianowego przenośnika zgrzebłowego o zmiennej prędkości ruchu*, w Monografia "Mechanizacja, automatyzacja i robotyzacja w górnictwie", Centrum Badań i Dozoru Górnictwa Podziemnego, Kraków – Lędziny 2014: 223–233.
[3] Suchoń J.: *Górnicze przenośniki zgrzebłowe. Teoria, badania i eksploatacja,* Instytut Techniki Górniczej, Gliwice 2012.
[4] Suchoń J., Tytko S.: *Nowe propozycje RFM "RYFAMA" S.A. w zakresie budowy i sterowania ruchem ścianowych przenośników zgrzebłowych*, V Szkoła Mechanizacji i Automatyzacji Górnictwa, Ustroń 2010.

JÓZEF SUCHOŃ, Ph.D., Eng.
STANISŁAW TYTKO, M.Sc., Eng.
jozek.suchon@gmail.com
stanislaw.tytko@kopex.com.pl

PAWEŁ MENDYKA, M.Sc., Eng.
Department of Mining, Dressing and Transport Machines
Faculty of Mechanical Engineering and Robotics
AGH University of Science and Technology
al. Mickiewicza 30, 30-059 Krakow, Poland
mendyka@agh.edu.pl